GREAT STEAK SURF CITY SQUEEZE

11800 WEST BROAD ST. SUITE 2116, RICHMOND, VA 23233

PROJECT DATA:

DESCRIPTION: NEW RESTAURANT TENANT IMPROVEMENT IN EXISTING BUILDING.
OCCUPANCY TYPE: B
CONSTRUCTION TYPE: TYPE II B
OCCUPANCY CONTENT: TYPE OF BUSINESS: RESTAURANT

SCOPE OF WORK/TENANT AREA: 1,290 SF

MEANS OF EGRESS
NOTE: THE FOLLOWING CALCS ARE FOR EXITING PURPOSES ONLY

INTERIOR:
SERVICE/PREP: 875 SF/200= 4
DINING: 118 SF/15= 8
CIRCULATION: 292 SF/300= 2
UNUSED SPACE: 118 SF/0= 0

TOTAL: 14 OCCUPANTS

REQUIRED EXITS: (IBC 2009 TABLE 1019.1)
REQUIRED DOOR WIDTH: 36" MIN.
14 OCCUPANTS X 0.20= 2.8
EXITS REQUIRED: 2
EXITS PROVIDED: 2

FIRE SPRINKLERS: YES
STAND PIPES: NO
FIRE ALARMS/STROBES/ANNUNCIATORS: YES
SMOKE DETECTORS: YES
FIRE EXTINGUISHERS: YES
EMERGENCY LIGHTING: YES
EXIT SIGNS: YES

RESTROOM CALCULATIONS:
PUBLIC RESTROOM PROVIDED WITHIN 500' OF TENANT SPACE

DRINKING FOUNTAIN:
DRINKING WATER IS PROVIDED ON SITE UPON REQUEST

PARKING CALCULATIONS:
PARKING PROVIDED BY MALL

DEFERRED SUBMITTALS:
FIRE PROTECTIONS: YES
SIGNAGE: YES

COUNTY OF HENRICO, VIRGINIA CODES:

ALL CONSTRUCTION SHALL COMPLY WITH THE FOLLOWING CODES AND AMENDMENTS PER THEIR ADOPTING ORDINANCES:

2009	INTERNATIONAL CODE COUNCIL / AMERICAN NATIONAL STANDARDS INSTITUE (ICC/ANSI) A117.1-2009 EDITION
2012	INTERNATIONAL BUILDING CODE (IBC)
2011	NATIONAL ELECTRICAL CODE (NEC)
2012	INTERNATIONAL FIRE CODE (IFC)
2012	INTERNATIONAL MECHANICAL CODE (IMC)
2012	INTERNATIONAL PLUMBING CODE (IPC)

PROJECT DIRECTORY:

TENANT/APPLICANT:
NAME: KAHALA BRANDS
ADDRESS: 9311 E VIA DE VENTURE
SCOTTSDALE, AZ 85258
CONTACT: STACY TIETJE
PHONE: 480.518.3317

LANDLORD:
NAME: MARCO METRY
ADDRESS: 10205 TARRINGTON WAY
SPOTSYLVANIA, VA 22551
CONTACT: MARCO METRY
PHONE: 804.248.7026

ARCHITECTURAL DESIGN:
NAME: BAR NAPKIN PRODUCTIONS
ADDRESS: 2828 N CENTRAL AVE. # 1300
PHOENIX, AZ 85004
CONTACT: JASON RIEKE
PHONE: 602.903.4822
EMAIL: JASON@BNP-LLC.COM

MECHANICAL/PLUMBING/ELECTRICAL ENGINEER:
NAME: DESIGN MANAGEMENT SOLUTIONS
ADDRESS: 6229 E. JOAN DE ARC AVE.
SCOTTSDALE, AZ. 85254
CONTACT: ANDREAS PLUNTKE
PHONE: 602.918.0155
EMAIL: ANDREAS@DESIGNMGT.NET

GENERAL CONTRACTOR:
NAME: TBD, TO BE BID
ADDRESS:

CONTACT:
PHONE:
EMAIL:

SHEET INDEX:

ARCHITECTURAL

A0.0	TITLE SHEET AND PROJECT INFORMATION
A0.1	EXITING AND ACCESSIBLE ROUTE AND DEMOLITION FLOOR PLAN
A1.0	ARCHITECTURAL FLOOR PLAN, EQUIPMENT PLAN AND SCHEDULE
A2.0	REFLECTED CEILING PLAN, MILLWORK AND FINISH FLOOR PLAN
A5.0	INTERIOR ELEVATIONS
A5.1	INTERIOR ELEVATIONS
A7.0	ARCHITECTURAL DETAILS

MECHANICAL, PLUMBING & ELECTRICAL

M-1	MECHANICAL PLAN
M-2	MECHANICAL SCHEDULES COM CHECK
M-3	CAPTIVEAIRE SHEET
M-4	CAPTIVEAIRE SHEET
M-5	CAPTIVEAIRE SHEET
M-6	CAPTIVEAIRE SHEET
M-7	CAPTIVEAIRE SHEET
P1	PLUMBING SPECIFICATIONS/SCHEDULES
P2	PLUMBING PLAN
P3	PLUMBING ISOMETRIC, GAS ISOMETRIC AND GAS CALC.
P4	PLUMBING DETAILS
E1	GENERAL NOTES, LEGENDS, SHEET INDEX, ONE-LINE DIAGRAM AND CALCULATIONS
E2	PANEL SCHEDULE
E2.1	COMCHECK, LIGHTING SCHEDULE
E3	LIGHTING PLAN
E4	POWER PLAN
E5	SPECIFICATIONS

GREAT STEAK SURF CITY SQUEEZE

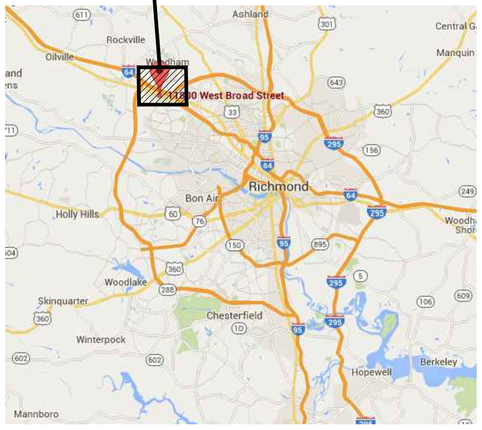

VICINITY MAP:
SCALE: NOT TO SCALE

PROJECT SITE

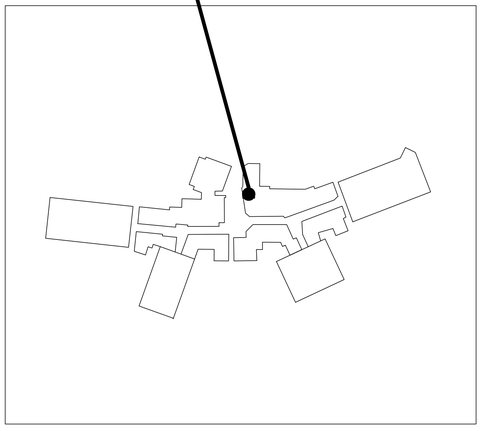

AREA MAP:
SCALE: NOT TO SCALE

FRANCHISEE: _____ _____
SIGNATURE DATE
AD: _____ _____
SIGNATURE DATE

bar napkin productions
2828 n central avenue
suite 1300
phoenix, az 85004
602 . 492 . 9494
www.bnp-llc.com

COMMONWEALTH OF VIRGINIA
PAUL L. BOSMAN
No. 0401-007885
ARCHITECT

GREAT STEAK SURF CITY SQUEEZE
STORE 7621 1946

PROJECT LOCATION
11800 WEST BROAD ST.
SUITE 2116
RICHMOND, VA 23233

ISSUE DATE
CITY SUBMITTAL 08.29.16

TITLE SHEET AND PROJECT INFORMATION

BN1309

A0.0

© THIS DRAWING IS AN INSTRUMENT OF SERVICE AND THE PROPERTY OF BAR NAPKIN LLC. THIS DRAWING MAY NOT BE REPRODUCED OR UTILIZED IN ANY MANNER WITHOUT THEIR WRITTEN PERMISSION.

9/15/2016 11:20:28 AM - Z:\KAHALA BRANDS\GREAT STEAK\BN1309 GS SCS Richmond VA 7621 1946\GREAT STEAK SURF CITY SQUEEZE\Sheets\A0.0 TITLE SHEET AND PROJECT INFORMATION.dwg - Alfred Pettarson

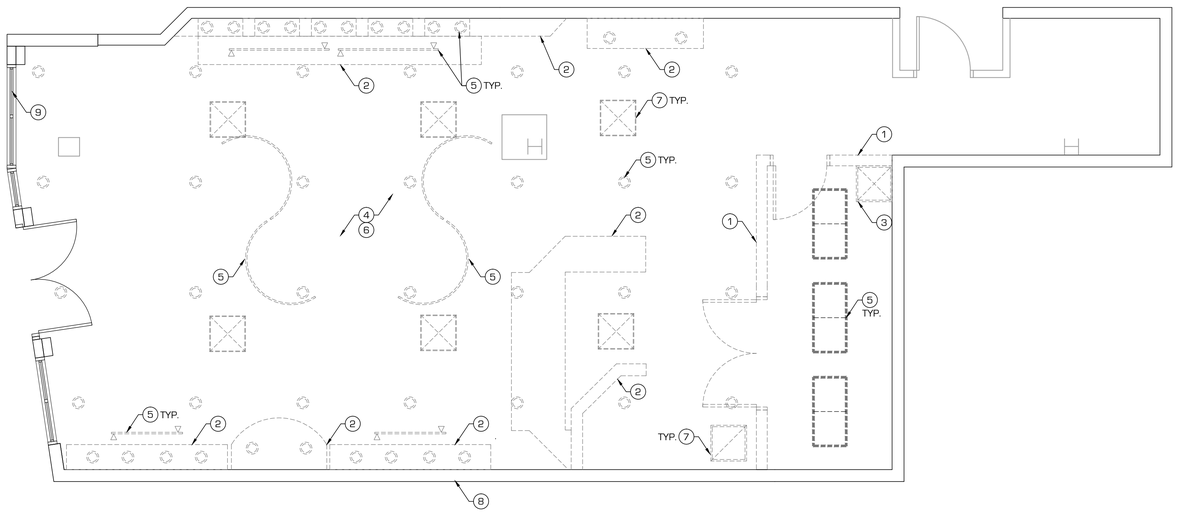

DEMOLITION PLAN

SCALE: 1/4" = 1'-0"

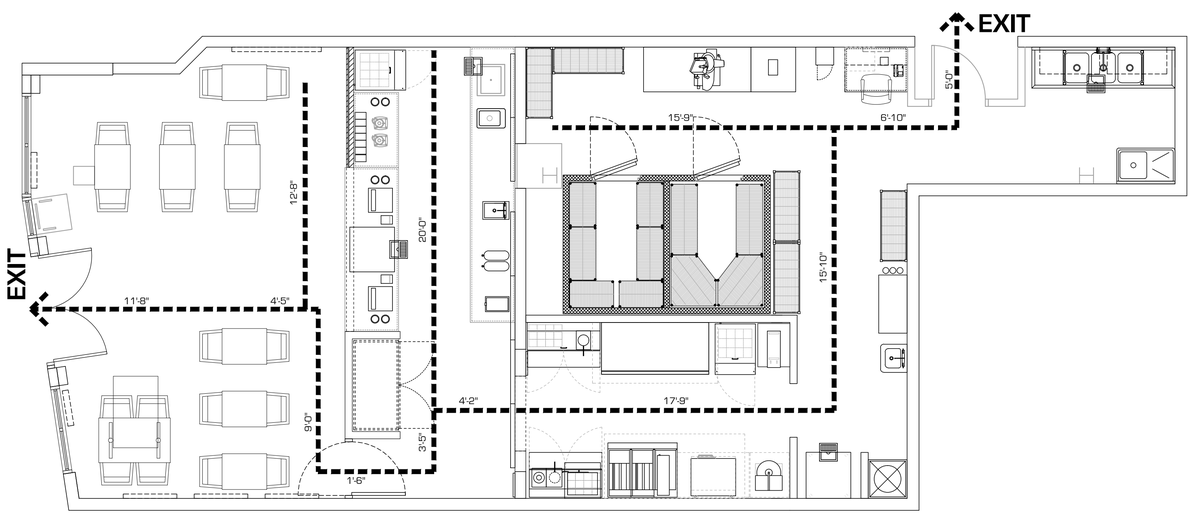

EXITING AND ACCESSIBLE ROUTE AND DEMOLITION FLOOR PLAN

SCALE: 1/4" = 1'-0"

FRANCHISEE: _____ _____

SIGNATURE DATE

AD: _____ _____

SIGNATURE DATE

DEMOLITION PLAN LEGEND

EXISTING TO BE REMOVED, AS NOTED

EXISTING TO REMAIN

NOTE: EXISTING UTILITIES IN SPACE TO REMAIN, PROTECT ALL EXISTING UTILITIES THROUGHOUT CONSTRUCTION PHASE.

DEMOLITION KEYED NOTES

1. EXISTING INTERIOR WALLS TO BE REMOVED.
2. EXISTING MILLWORK TO BE REMOVED.
3. EXISTING PLUMBING FIXTURES AND ASSOCIATED HARDWARE TO BE REMOVED.
4. EXISTING FLOORING AND BASE TO BE REMOVED. PATCH AND REPAIR FLOOR TO RECEIVE NEW FLOORING. REFER TO FINISH FLOOR PLAN, THIS SET, FOR EXTENT OF NEW TILE.
5. EXISTING LIGHT FIXTURES TO BE REMOVED.
6. EXISTING 2' X 4' CEILING GRID TO BE REMOVED.
7. EXISTING MECHANICAL FIXTURES TO BE REMOVED.
8. EXISTING DEMISING WALL TO REMAIN.
9. EXISTING STOREFRONT TO REMAIN.

DEMOLITION GENERAL NOTES

1. THE SCOPE OF DEMOLITION WORK IS NOT ALL INCLUSIVE. THE GENERAL CONTRACTOR SHALL INCLUDE IN THE BID POSSIBLE DEMOLITION BASED ON EXISTING CONDITIONS FOUND IN THE FIELD. THESE CONDITIONS INCLUDE BUT ARE NOT LIMITED TO:
   - MECHANICAL DUCT AND UNIT REWORK AND EQUIPMENT ACCESS TO PROVIDE FOR NEW CONSTRUCTION NEEDS AT EXISTING GYPSUM BOARD CEILINGS, OR ROOF PENETRATIONS.
   - ELECTRICAL PANEL RELOCATION, NEW CONDUIT REWORK, OR FLOOR AND ROOF PENETRATIONS.
   - PLUMBING SOIL AND SUPPLY LINE REWORK, OR FLOOR AND ROOF PENETRATIONS.
   - TELEPHONE CABLING REWORK, OR FLOOR AND ROOF PENETRATIONS.
   - AUDIO VISUAL CABLING WORK, OR FLOOR AND ROOF PENETRATIONS.
   - FLOOR FLOATING AND LEVELING AS REQUIRED FOR CERAMIC TILE, STONE TILE AND OTHER FLOORING.
2. THE GENERAL CONTRACTOR SHALL PROVIDE FOR TRASH REMOVAL AND CLEAN UP INCLUDING BUT NOT LIMITED TO:
   - SCOPE OF WORK
   - ALL PUBLIC AND SERVICE ACCESS ROUTES
   - ELEVATORS IF APPLICABLE
   - STREET AND TRASH STORAGE AREAS

   TRASH SHALL BE REMOVED FROM SITE AND TAKEN TO TRASH DUMPSTER EACH NIGHT.
3. REMOVE EXISTING DOOR HARDWARE AS NECESSARY.
4. REMOVE EXISTING PARTITIONS, STUDS, ELECTRICAL, DOORS, FRAMES, AND MILLWORK AS NOTED ON PLAN(S).
5. REMOVE EXISTING FLOORING AND BASE AS NOTED ON PLAN(S).
6. REMOVE EXISTING WALL COVERING AS NOTED ON PLAN(S).
7. REMOVE EXISTING PLUMBING FIXTURES AS NOTED ON PLAN(S). CAP OFF PLUMBING. IN PARTITIONS BEING REMOVED AND/OR LOCATIONS SPECIFIED, STRIP OUT ALL SOIL LINES TO BE FLUSH WITH SLAB OR BELOW SLAB AND PROPERLY CAP AND SEAL.
8. AT PARTITIONS BEING REMOVED, STRIP OUT ALL POWER TO NEAREST J-BOX ABOVE SUSPENDED CEILING. AT J-BOX, WIRE NUT ALL TERMINATIONS AND CLOSE BOX.
9. REMOVE EXISTING LIGHT FIXTURES, GYPSUM BOARD CEILINGS AND SOFFIT, AND ACOUSTICAL CEILING TILE AND GRID AS NOTED ON PLAN(S).
10. CAREFULLY REMOVE AND DELIVER TO TENANT OR BUILDING OWNER ALL SALVAGEABLE ITEMS SUCH AS DOORS, HARDWARE, PLUMBING FIXTURES, WINDOWS, LIGHT FIXTURES, CEILING TILE, THERMOSTATS, OUTLETS, SWITCHES, WINDOW COVERINGS AND GRILLES. REUSE ITEMS IF POSSIBLE OR AS NOTED.
11. THE GENERAL CONTRACTOR SHALL PROPERLY SEAL AND SECURE ADJOINING AREAS SO THAT THEY ARE NOT IMPACTED BY DEMOLITION. THE GENERAL CONTRACTOR SHALL PROVIDE TEMPORARY PROTECTION WHERE OPENINGS CREATED AS A RESULT OF DEMOLITION EXPOSE THIS SCOPE OF WORK TO THE EXTERIOR ELEMENTS OR WEATHER.
12. THE GENERAL CONTRACTOR SHALL BE RESPONSIBLE FOR ALL EXISTING MATERIALS DURING DEMOLITION.
13. IF DEMOLITION OCCURS IN AREAS ADJACENT TO A COMMON ELEVATOR LOBBY OR OTHER BUILDING CORRIDOR, LEAVE EXTRA BUILDING FLOORING, BASE, WALL COVERING, AND CEILING IN THE AREA TO BE DEMOLISHED TO ENSURE A CLEAR TRANSITION OF FINISHES.
14. COORDINATE WITH TENANT OR BUILDING OWNER FOR AREA TO STAGE MATERIALS FOR REUSE.

EXITING PLAN LEGEND

EXIT ROUTE

WALL MOUNTED EXIT SIGN

CEILING MOUNTED EXIT SIGN

NOTE: MEANS OF EGRESS ILLUMINATION TO BE PROVIDED IN COMPLIANCE WITH SECTION 106 IBC.

NOTE: REFER TO ELECTRICAL DRAWING SHEETS FOR EXACT MEANS OF EGRESS ILLUMINATION LOCATIONS.

bnp
bar napkin productions

2828 n central avenue
suite 1300
phoenix, az 85004
602 . 492 . 9494
www.bnp-llc.com

COMMONWEALTH OF VIRGINIA
PAUL L. BOSMAN
No. 0401-007885
ARCHITECT

GREAT STEAK SURF CITY SQUEEZE

STORE 7621 1946

PROJECT LOCATION

11800 WEST BROAD ST.
SUITE 2116
RICHMOND, VA 23233

	ISSUE DATE
CITY SUBMITTAL	08.29.16

EXITING AND ACCESSIBLE ROUTE AND DEMOLITION FLOOR PLAN

BN1309

A0.1

© THIS DRAWING IS AN INSTRUMENT OF SERVICE AND THE PROPERTY OF BAR NAPKIN,LLC. THIS DRAWING MAY NOT BE REPRODUCED OR UTILIZED IN ANY MANNER WITHOUT THEIR WRITTEN PERMISSION.

8/29/2016 2:05:44 PM - Z:\KAHALA BRANDS\GREAT STEAK\BN1309 GS SCS Richmond VA 7621 1946\GREAT STEAK SURF CITY SQUEEZE\Sheets\A0.1 EXITING AND ACCESSIBLE ROUTE PLAN.dwg - Alfred Patterson

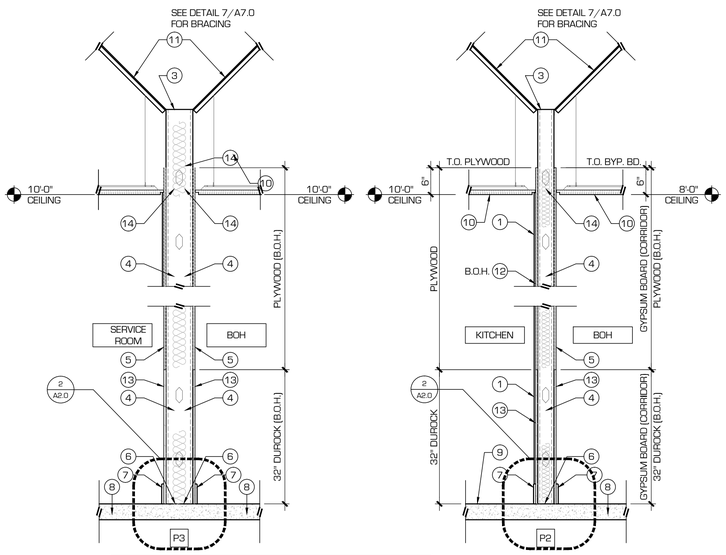

PARTITION TYPES

PTN-TYPES.DWG SCALE: 3/4"=1'-0"

EQUIPMENT SCHEDULE

ITEM #	QTY.	DESCRIPTION	MANUFACTURER	MODEL #	GENERAL REMARKS
EQUIPMENT					
GREAT STEAK					
1	2	POINT OF SALE TERMINAL	ERC	SP-820	NEW
2	2	CASH DRAWER	ERC	6E410	NEW
3	2	THERMAL RECEIPT PRINTER	ERC	BTP-R880NP	NEW
4	1	SAFE	FIRE KING	CS2820	NEW
5	6	CUP DISPENSER	SAN JAMAR	C2410C18	NEW COUNTER HOLE DIAMETER 5 11/16"
6	1	SANDWICH / SALAD UNIT (27")	TRUE MANUFACTER	TSSU 27-12M-C	NEW
7	2	SANDWICH / SALAD UNIT (48")	TRUE MANUFACTER	TSSU 48-12M-B	NEW
8	1	CHEESE PUMP DISPENSER	SERVER	81140	NEW
9	1	TWIN TOPPING WARMER	SERVER	81290	NEW
10	1	DRAWER WARMER	HATCO	HDW-1	NEW
11	1	MEAT SLICER	HOBART	HS6N-1	NEW
12	1	WORK TABLE (72")	TARRISON	WT-3072	NEW
13	1	CUTTER/MIXER, VERTICAL & VEG. PREP	ROBOT COUPE	R2N	NEW
14	1	PREMIX DISPENSER	CRATHCO	D25-3	NEW
15	1	DROP-IN HAND SINK	TARRISON	DI-14	NEW
16	1	MICROWAVE OVEN	PANASONIC	NE-12523	NEW
16A	1	STAINLESS STEEL SHELVE	TARRISON	TS-W5-2424	NEW
17	1	CONVECTION OVEN	HOBART	HEC20	NEW
17A	1	WORK TABLE	TARRISON	WT48S3048	NEW
18	1	OPEN BREAD RACK	NU-VU	HW-2G	NEW
19	1	DEEP FRYER	IMPERIAL	IFSCB350	NEW
20	1	HEAVY DUTY GRIDDLE	IMPERAL	ITG-72	NEW
20A	1	EQUIPMENT STAND	IMPERAL	TIGS-72 W/ CASTERS	NEW
21	1	PREP SINK	TARRISON	PS1-1BR	NEW
22	1	BEVERAGE DISPENSER	CORNELIUS	IDC255	NEW
23	1	COFFEE MACHINE	BUNN	VPR	NEW
24	1	TEA MACHINE	BUNN	TB3	NEW
25	4	SAMSUNG MONITOR (4)	SAMSUNG	D848E-48" LED DISPLAY	NEW
25A	1	GRAPHICS	IMAGE MOVER		NEW
26	1	SOFFIT LETTERING	THOMAS PRINTWORKS		NEW (SEE ELEVATION 3/A5.0)
27	1	LIGHT BOX	LSI		NEW
28	1	TRASH CONTAINER	WALSH	BLM-WASTE-TY	NEW (ORDER THROUGH NEPTUNE)
29	18	CHAIR	OAK STREET	EMC2840-40	NEW (ORDER THROUGH NEPTUNE)
30	7	TABLES (24" X 30")	OAK STREET	CTM2430	NEW (ORDER THROUGH NEPTUNE)
31	1	TABLE (ADA) (30" X 48")	OAK STREET	CTM3048	NEW (ORDER THROUGH NEPTUNE)
32	3	WALL MURAL (3)	IMAGE MOVER		NEW
33	1	WORK TABLE (30")	TARRISON	TA-BLP-30SS	NEW
34	1	WALL MOUNTED HAND SINK W/ SPLASH GUARD	TARRISON	TA-HS14SP	NEW
35	1	3 COMPARTMENT SINK	TARRISON	TA-PS3-18LR	NEW
36	4	POLY-SEAL SHELF	TARRISON	14" X 42"	NEW
37	1	WALK - IN COOLER (6' X 8')	KOLPAK	P7-068-CT	WALK - IN COOLER MAINTAIN 1" AIR SPACE AROUND ALL SIDES
38	1	WALK - IN FREEZER (6' X 8')	KOLPAK	PCR688-DCR PREPACKED UNIT	WALK - IN FREEZER MAINTAIN 1" AIR SPACE AROUND ALL SIDES
39	2	WALK - IN SHELVING 5-SIDES, POLYSEAL	TARRISON	SS183431L	NEW
40	2	WALK - IN SHELVING 5-SIDES, POLYSEAL	TARRISON	SS183431R	NEW
41	4	WALK - IN SHELVING 18" X 48"	TARRISON	S1848Z	NEW
41A	4	WALK - IN RACK (18"x30")	DUNNAGE	18" X 30"	NEW
41B	2	WALK - IN SHELVES RACK (18"x36")	DUNNAGE	18" X 36"	NEW
42	1	5 COMPARTMENT LOCKER	TARRISON	TS-L12125P	NEW
43	1	DESK W/ FILE CABINET/ SHELF/ CHAIR PHONE/ MUZAK			NEW CUSTOM
44	1	PHONE BOARD			TBD
45	1	STAND ALONE ICE MACHINE W/ BIN	ICE - O - MATIC	GEM0450A	NEW
46	1	MOP SINK	FLORESTONE	MSR - 2424	NEW - (OR EQUAL)
47	1	WATER HEATER			NEW
48	5	DRY STORAGE RACK (18"x48")	TARRISON		NEW
49	4	FLOOR SINK	JASAN	49000-2	NEW - (OR EQUAL)
50	1	BAG - IN- BOX /CO2 CONTAINERS			TBD
50A	2	HOOD			NEW
50B	1	GYROS MACHINE AND 26" STAND	XL MANUFACTURNING INC.	4LE	NEW
50C	1	UNDER COUNTER REFRIGERATOR	TRUE MANUFACTER	TUC-48-LP-HC	NEW
50D	2	MONITOR /BUMP BAR KEYPAD	ACER	17" MONITOR	NEW
50E	2	BUMP BAR KEYPAD AND VIDEO CONTROLLER	ERC	KP-4000	NEW
50F	2	KITCHEN VIDEO BRACKET	ERC	850.QSR BKT	NEW
SURF CITY SQUEEZE					
					NEW
51	1	SANDWICH / SALAD UNIT (27")	TRUE MANUFACTER	TSSU 27-12M-B	NEW
52	14	SMALL BIN	CAL-MIL	AS101	NEW
53	2	BLENDER	VITAMIX	36021	NEW
54	1	DROP - IN ICE BIN	ADVANCE TABCO	D-24-IBL-7	NEW
55	1	DUMP SINK	TARRISON	DI-14	NEW
56	2	SAMSUNG MONITOR (2)	SAMSUNG	D848E-48" LED DISPLAY	NEW
57	1	SOFFIT LETTERING	THOMAS PRINTWORKS		NEW (SEE ELEVATION 3/A5.0)
58	1	WALL MURAL	THOMAS PRINTWORKS		NEW
59	1	LIGHT BOX	LSI		NEW

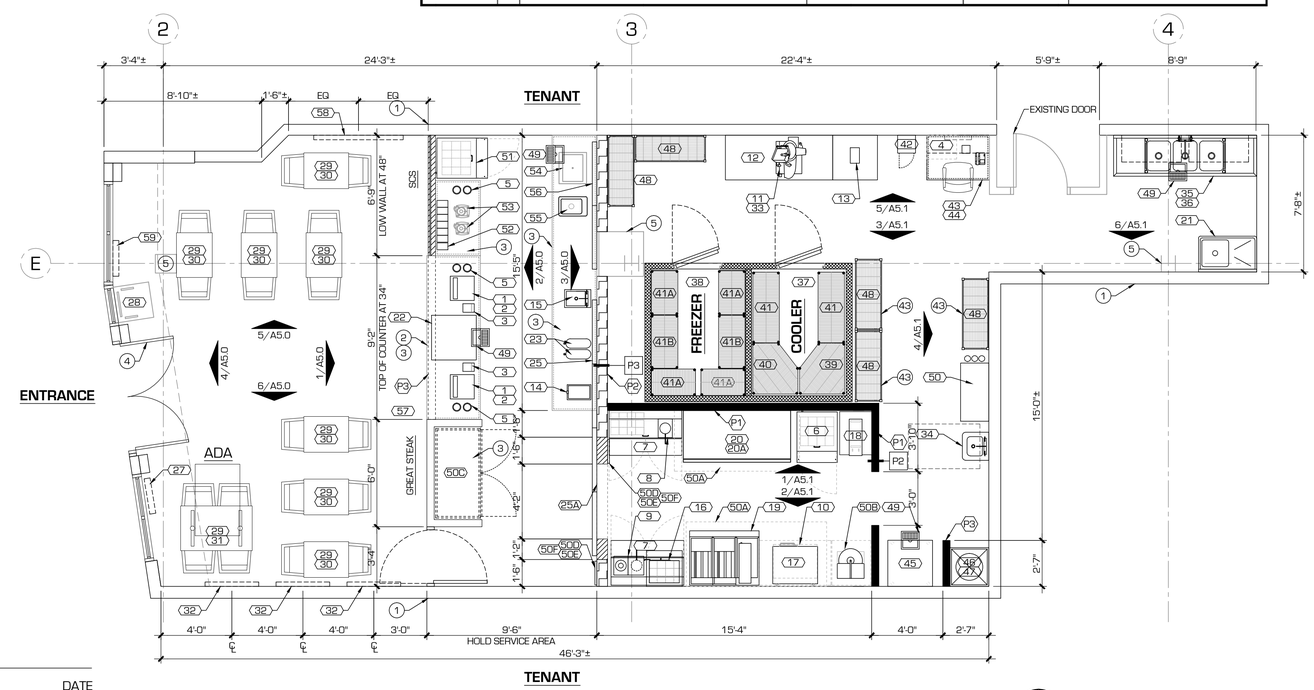

ARCHITECTURAL FLOOR PLAN EQUIPMENT PLAN AND SCHEDULE

SCALE: 1/4" = 1'-0"

FRANCHISEE: _____ SIGNATURE _____ DATE

AD: _____ SIGNATURE _____ DATE

PARTITION KEYED NOTES

- P1 FULL HEIGHT INTERIOR PARTITION.
- P2 FULL HEIGHT INTERIOR PARTITION. FOR PLUMBING.
- P3 PARTIAL HEIGHT INTERIOR PARTITION.

PARTITION KEYED NOTES

1. FRP FULL HEIGHT (TO CEILING) CAULK AT ALL EDGES, JOINTS, BOTTOM OF HEADER AS REQUIRED (AT B.O.H.)
2. ALIGN FRAMING/FURRING FOR FLUSH INTERIOR FINISH
3. CONTINUOUS STUD TRACK WITH (2)#12 SELF TAPPING SCREWS AT EACH STUD
4. 3-5/8" x 20 GA. METAL STUDS AT 24" O.C. - 8" x 20 GA. METAL STUDS AT P5
5. 5/8" GYPSUM BOARD ON METAL STUD
6. CONTINUOUS METAL STUD TRACK - SEE STUD SCHEDULE NOTE NO. 3, THIS SHEET.
7. BASE - REFER TO INTERIOR ELEVATIONS AND FINISH SCHEDULE, THIS SET, FOR ADDITIONAL INFORMATION
8. EXISTING CONCRETE SLAB. CONTRACTOR TO PROVIDE NEW SLAB (MATCH THICKNESS) AT ALL SAW CUTTING AND BLOCKOUTS. REFER TO DETAIL 1/A7.0 FOR ADDITIONAL INFORMATION
9. FINISHED FLOOR MATERIAL, AS SCHEDULED
10. SUSPENDED ACOUSTIC TILE CEILING. REFER TO DETAIL B/A7.0 FOR ADDITIONAL INFORMATION. GYPSUM BOARD WHERE OCCURS.
11. STAGGERED 3-5/8" METAL STUD BRACING AT 48" O.C. - REFER TO DETAIL 7/A7.0 FOR ADDITIONAL INFORMATION
12. 5/8" PLYWOOD SUBSTRATE (FIRE TREATED)
13. 5/8" DUROCK CEMENT BOARD SUBSTRATE TO BE INSTALLED 1/4" A.F.F.
14. FULL HEIGHT FULL BATT INSULATION. CLIP ATTACHED (WHERE REQUIRED)
15. EXISTING EXTERIOR FINISH
16. EXISTING STRUCTURAL COLUMNS TO REMAIN
17. 6" METAL STUDS AT 24" O.C.
18. TOP OF EXISTING DECK
19. 5/8" GYPSUM BOARD FULL HEIGHT
20. SLIP TRACK
21. CERAMIC TILE

PARTITION GENERAL NOTES

1. FOR ALL DOORS REQUIRING WALL MOUNTED DOOR STOPS, PROVIDE METAL STUD BLOCKING PER BLOCKING SCHEDULE
2. EXISTING EXTERIOR GLAZING TO BE REMOVED AND REPLACED TO MEET OWNER SPECIFICATIONS, SEE EXTERIOR AND INTERIOR ELEVATIONS
3. IF REQUIRED BY FIRE OFFICIALS OR OTHER AUTHORITIES IN JURISDICTION, TENANT ELECTRICAL CONTRACTOR SHALL FURNISH AND INSTALL A COMPLETE FIRE/SMOKE DETECTION AND ALARM SIGNALING SYSTEM. DESIGNED AND INSTALL IN TOTAL CONFORMANCE WITH APPLICABLE CODES
4. THE SYSTEM SHALL INCLUDE, BUT NOT LIMITED TO, THE FOLLOWING:
   - A. AREA SMOKE DETECTORS
   - B. DUCT DETECTOR(S) IN HVAC UNIT(S)
   - C. AUDIBLE AND VISUAL ANNUNCIATORS
   - D. ZONE ADAPTER MODULE (ZAM) WHERE APPLICABLE

   E.MANUAL PULL STATIONS AT ALL EXITS
5. WHERE BUILDING/SHOPPING CENTER IS EQUIPPED WITH A CENTRAL FIRE ALARM SYSTEM. TENANT'S ALARM SYSTEM SHALL BE OF SAME MANUFACTURER AND TYPE, AND SHALL BE PROVIDED WITH ALL REQUIRED INTERFACE DEVICES, WIRING AS REQUIRED.

FLOOR PLAN LEGEND

- NAME / XX — ROOM NAME SYMBOL
- X/AX.X — ELEVATION SYMBOL
- X / XXX — DETAIL SYMBOL
- X X — DOOR/FRAME TYPE
- HARDWARE TYPE
- X — WINDOW TYPE SYMBOL
- P.X — WALL PARTITION SYMBOL
- X — EQUIPMENT TYPE SYMBOL

FLOOR PLAN KEYED NOTES

1. EXISTING SHELL BUILDING.
2. ADA ACCESSIBLE POS MILLWORK BY OTHERS. CONTRACTOR TO COORDINATE.
3. CUSTOM MILLWORK COUNTERTOP. COORDINATE INSTALLATION WITH EQUIPMENT.
4. EXISTING STOREFRONT DOOR.
5. EXISTING COLUMN.

FLOOR PLAN GENERAL NOTES

1. DIMENSIONS SHOWN ARE TO FACE OF FINISH
2. WRITTEN DIMENSIONS TAKE PRECEDENCE OVER SCALED DIMENSIONS ON THE CONSTRUCTION DOCUMENTS. DO NOT SCALE.
3. PROVIDE FIRE EXTINGUISHERS, TYPE ABC, WALL HUNG, TOP AT 5'-0" A.F.F. (BY G.C.) NUMBER AND LOCATION DETERMINED BY LOCAL CODE.
4. FIELD VERIFY ALL EXISTING CONDITIONS AND DIMENSIONS. IMMEDIATELY NOTIFY ARCHITECT IN WRITING OF ANY DISCREPANCIES.
5. NO WALL TILE BEHIND MILLWORK.
6. ALL FLOORING FINISH MATERIAL SHALL BE COORDINATED PRIOR TO MILLWORK INSTALLATION.
7. USE M.R. GYPSUM BOARD (GREEN BOARD) IN ALL WET WALL LOCATIONS UNLESS NOTED OTHERWISE.
8. ASSUMED FINISH FLOOR ELEVATION WITH THE ARCHITECTURAL DRAWINGS IS SHOWN AS 0'.00".
9. CONTRACTOR TO SITE VERIFY ALL EXISTING CONDITIONS. CLEAR HEIGHTS, REQUIRED DEMOLITION AND CONCRETE SLAB PRIOR TO BID. NO ADDITIONAL COMPENSATION WILL BE ALLOWED FOR FAILURE TO PROPERLY INCLUDE ALL COSTS/ PRICING FOR T.I. SCOPE OF WORK.

bnp
bar napkin productions

2828 n central avenue
suite 1300
phoenix, az 85004
602 . 492 . 9494
www.bnp-llc.com

GREAT STEAK ®

SURF CITY SQUEEZE SMOOTHIES

COMMONWEALTH OF VIRGINIA
PAUL L. BOSMAN
No. 0401-007885
ARCHITECT

GREAT STEAK SURF CITY SQUEEZE

STORE 7621 1946

PROJECT LOCATION

11800 WEST BROAD ST.
SUITE 2116
RICHMOND, VA 23233

	ISSUE DATE
CITY SUBMITTAL	08.29.16

ARCHITECTURAL FLOOR PLAN EQUIPMENT PLAN AND SCHEDULE

BN1309

A1.0

© THIS DRAWING IS AN INSTRUMENT OF SERVICE AND THE PROPERTY OF BAR NAPKIN LLC. THIS DRAWING MAY NOT BE REPRODUCED OR UTILIZED IN ANY MANNER WITHOUT THEIR WRITTEN PERMISSION.

9/30/2016 3:41:43 PM - Z:_KAHALA BRANDS_GREAT STEAK_BN1309 GS SCS Richmond VA 7621 1946_GREAT STEAK_SURF CITY SQUEEZE_Sheets\A1.0 ARCHITECTURAL FLOOR PLAN EQUIPMENT PLAN AND SCHEDULE.dwg - Alfred Patterson

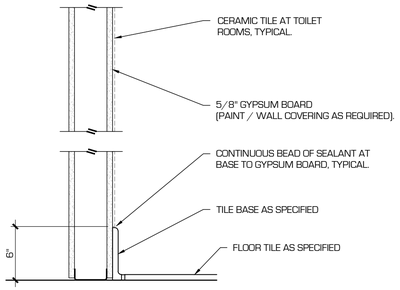

1 WALL BASE - PUBLIC AREAS

WALL BASE (TILE) - PUBLIC AREAS.DWG SCALE: 1-1/2"=1'-0"

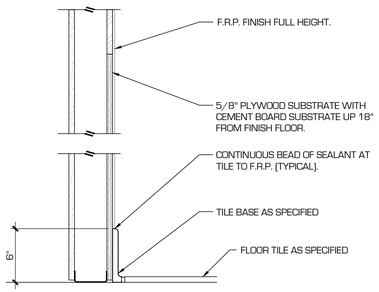

2 WALL BASE - BACK OF HOUSE

WALL BASE (TILE) - BACK OF HOUSE.DWG SCALE: 1-1/2"=1'-0"

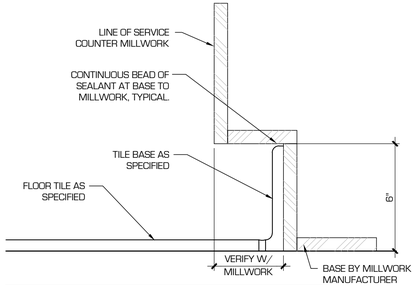

3 WALL BASE - COUNTER

WALL BASE - COUNTER.DWG SCALE: 3"=1'-0"

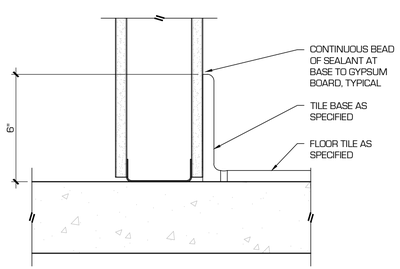

4 COVE BASE DETAIL

COVE BASE DETAIL (TILE).DWG SCALE: 3"=1'-0"

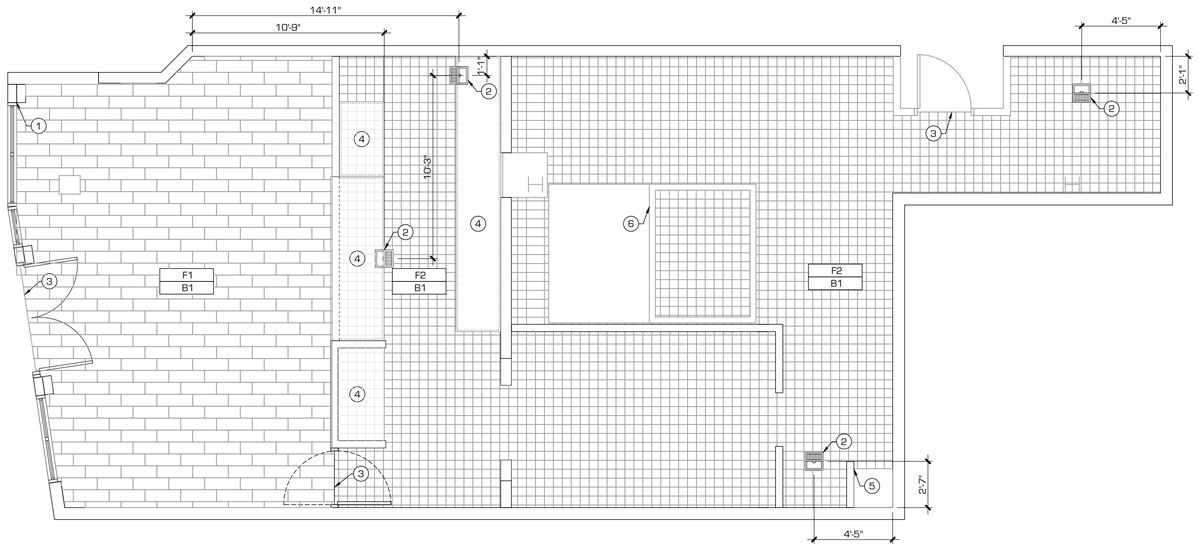

MILLWORK AND FINISH FLOOR PLAN

SCALE: 1/4" = 1'-0"

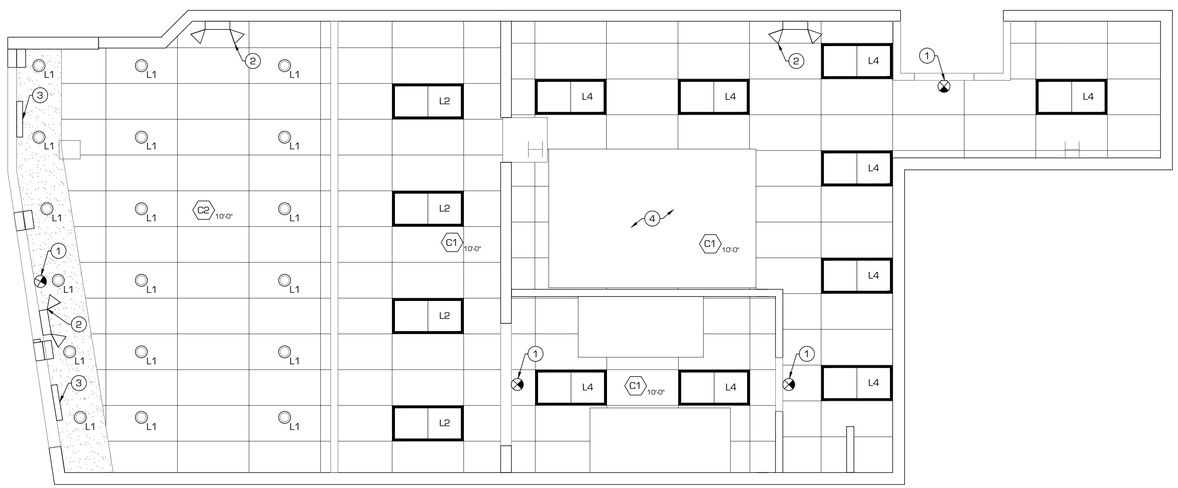

REFLECTED CEILING PLAN

SCALE: 1/4" = 1'-0"

FRANCHISEE: _____ _____

SIGNATURE DATE

AD: _____ _____

SIGNATURE DATE

FINISH PLAN LEGEND

- XXX — WALL FINISH SYMBOL
- XXX — FLOOR FINISH SYMBOL
- X / AX.X — FLOOR TRANSITION SYMBOL

NOTE: REFER TO ELEVATIONS FOR MILLWORK AND VERTICAL FINISHES NOT NOTED ON THIS SHEET.

MILLWORK LEGEND

- NEW MILLWORK, REFER TO ELEVATIONS AND DETAILS FOR ADDITIONAL INFORMATION
- X / AX.X — DETAIL SYMBOL

FINISH PLAN KEYED NOTES

1. START POINT OF NEW TILE FLOORING.
2. NEW FLOOR SINK.
3. PROVIDE NEW SCHLUSTER STRIP.
4. NEW MILLWORK.
5. FACE OF MOP SINK, SEAL TILE REQUIRED PER MFG. SPECIFICATIONS..
6. TILE DOES NOT GO UNDER THE WALLS OF THE WALK - IN.

FINISH PLAN GENERAL NOTES

1. NO WALL TILE BEHIND MILLWORK.
2. ALL FLOORING FINISH MATERIAL SHALL BE COORDINATED PRIOR TO MILLWORK INSTALLATION.
3. COORDINATE WITH PLUMBING DRAWINGS FOR ALL FLOOR DRAINS AND CLEAN OUT LOCATIONS.
4. ALL FLOOR JOINTS AND QUARRY TILE JOINTS SHALL BE 3/16".
5. G.C. TO LEAVE (1) GALLON OF EACH PAINT COLOR, PROPERLY LABELED AND SEALED. EXCESS PAINT MUST BE DISPOSED OF OR RECYCLED AT A PROPER FACILITY, NOT TO BE DISPOSED OF INTO GENERAL GARBAGE OR DRAINS.
6. PAINTED SURFACES TO FULLY EXTEND BEHIND ALL MILLWORK.
7. ALL MILLWORK COUNTERTOPS SHOWN TO BE "SS1" UNLESS NOTED OTHERWISE.

FLOOR FINISHES

F1	EMSER COUNTRY YORK 8" X 24" GROUT: CUSTOM BUILDING PRODUCTS #95 SABLE BROWN PLACEMENT: LOBBY AND RESTROOM FLOORS
F2	EMSER EQUARRY BRICK 6" X 6" GROUT: CUSTOM BUILDING PRODUCTS #50 NUTMEG PLACEMENT: KITCHEN AND SERVICE AREA FLOORS
B1	EMSER COUNTRY YORK 6" X 24" GROUT: CUSTOM BUILDING PRODUCTS #95 SABLE BROWN PLACEMENT: LOBBY AND RESTROOM FLOORS
B2	EMSER EQUARRY BRICK 6" X 6" GROUT: CUSTOM BUILDING PRODUCTS #50 NUTMEG PLACEMENT: KITCHEN AND SERVICE AREA FLOORS

PATTERN OF 8" X 24" (F1) FLOOR TILE TO BE LAID AT 1/3" THROUGHOUT LOBBY PER (TCNA) TILE COUNCIL OF NORTH AMERICA INSTRUCTIONS. INSTALL PER MANUFACTURER SPECIFICATIONS.

LIGHTING LEGEND

L1	MANUFACTURER: LSI INDUSTRIES PART NUMBER: 516853S 6" LED DOWN LIGHT WITH WHITE TRIM - WARM WHITE.
L2	MANUFACTURER: LSI INDUSTRIES PART NUMBER: 521840 DECORATIVE CENTER BASKET TROFFER - WARM WHITE.
L4	MANUFACTURER: LSI INDUSTRIES PART NUMBER: 566763 LIGHT NEUTRAL WHITE.
L6	MANUFACTURER: LSI DECRIPTION: EMERGENCY LIGHTING UNIT IN BLACK HOUSING CATALOG ORDER: 74168
L7	MANUFACTURER: LSI CATALOG: LSI LED EXIT SIGN IN BLACK HOUSING LSI PART NUMBER: 74168 DESCRIPTION: LED EXIT SIGN, IN BLACK HOUSING
E	EXIT SIGN.

REFLECTED CEILING PLAN KEYED NOTES

1. NEW EXIT SIGN.
2. NOT USED.
3. LIGHT BOX.
4. GRID START POINT.

RCP GENERAL NOTES

1. DIMENSIONS SHOWN ARE TO CENTER OF FIXTURE
2. WRITTEN DIMENSIONS TAKE PRECEDENCE OVER SCALED DIMENSIONS ON THE CONSTRUCTION DOCUMENTS. DO NOT SCALE.
3. EMERGENCY EXIT LIGHT TO BE INSTALLED TO MEET CODE AS REQUIRED.
4. FIELD VERIFY ALL CEILING HEIGHTS ARE ATTAINABLE AND THERE ARE NO OBSTRUCTIONS.
5. LIGHTS CENTERED IN TILE U.N.O.

CEILING FINISHES

C1	CEILING TILE. #670 ARMSTRONG 24" X 48" VINYL CLAD GYPSUM LAY - IN PANELS (WHITE) CLASS A FIRE RATING PLACEMENT: BACK OF HOUSE AND SERVICE LINE.
C2	CEILING TILE. #1729 ARMSTRONG 24" X 48" FINE FISSURED SUARE LAY - IN PANELS (WHITE) CLASS A FIRE RATING PLACEMENT: LOBBY
C3	GYPSUM BOARD CEILING - PAINTED UNLESS OTHERWISE NOTED

bnp
bar napkin productions

2828 n central avenue
suite 1300
phoenix, az 85004
602 . 492 . 9494
www.bnp-llc.com

GREAT STEAK

SURF CITY SQUEEZE SMOOTHIES

COMMONWEALTH OF VIRGINIA
PAUL L. BOSMAN
No. 0401-007885
ARCHITECT

GREAT STEAK SURF CITY SQUEEZE

STORE 7621 1946

PROJECT LOCATION

11800 WEST BROAD ST.
SUITE 2116
RICHMOND, VA 23233

ISSUE DATE	
CITY SUBMITTAL	08.29.16

REFLECTED CEILING PLAN, MILLWORK AND FINISH FLOOR PLAN

BN1309

A2.0

© THIS DRAWING IS AN INSTRUMENT OF SERVICE AND THE PROPERTY OF BAR NAPKIN LLC. THIS DRAWING MAY NOT BE REPRODUCED OR UTILIZED IN ANY MANNER WITHOUT THEIR WRITTEN PERMISSION.

9/29/2016 2:05:28 PM - Z:_KAHALA BRANDS_GREAT STEAK_BN1309 GS SCS Richmond VA 7621 1946_GREAT STEAK - SURF CITY SQUEEZE_Sheets\A2.0 REFLECTED CEILING PLAN, MILLWORK AND FINISH FLOOR PLAN.dwg - Alfred Patterson

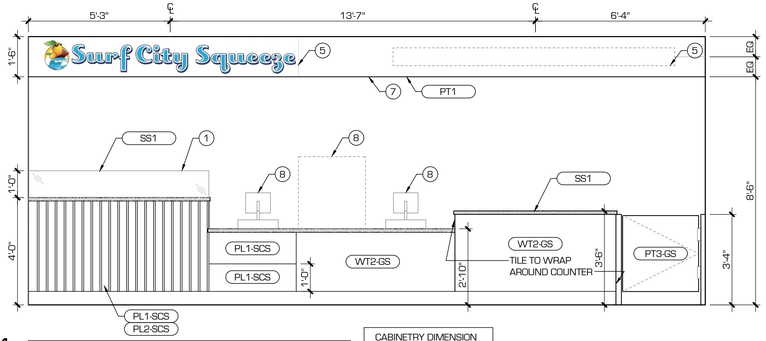

CABINETRY DIMENSION FOR REFERENCE ONLY

1 PREP AREA ELEVATION AT FRONT LINE

PREP.DWG SCALE: 3/8"=1'-0"

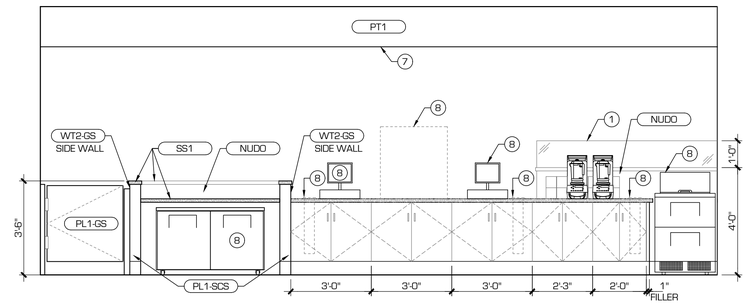

2 PREP AREA ELEVATION AT FRONT LINE

PREP.DWG SCALE: 3/8"=1'-0"

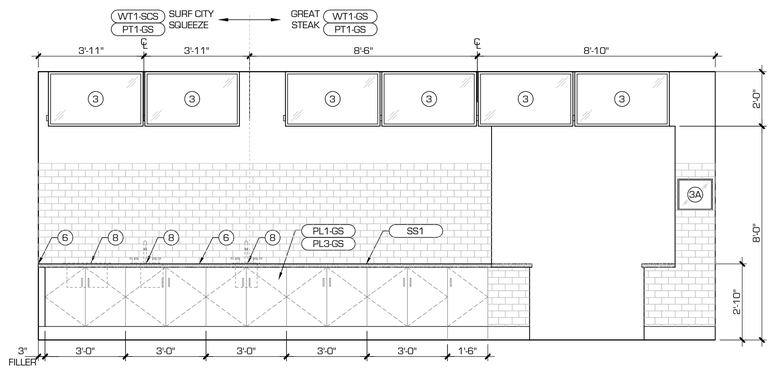

3 PREP AREA ELEVATION AT BACK LINE

PREP.DWG SCALE: 3/8"=1'-0"

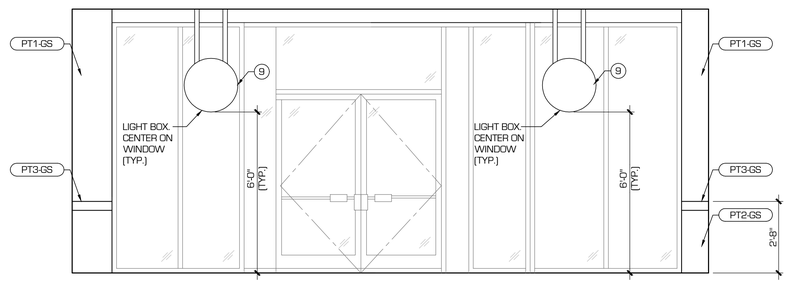

4 DINING ELEVATION AT STOREFRONT

DINING.DWG SCALE: 3/8"=1'-0"

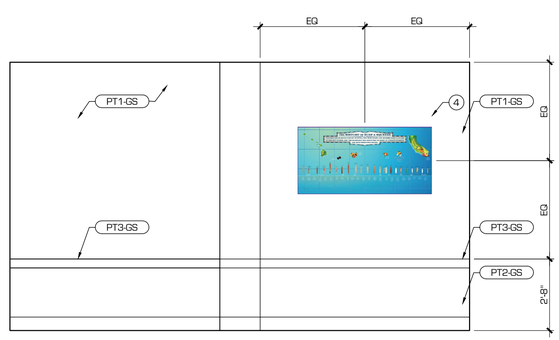

5 DINING ELEVATION

DINING.DWG SCALE: 3/8"=1'-0"

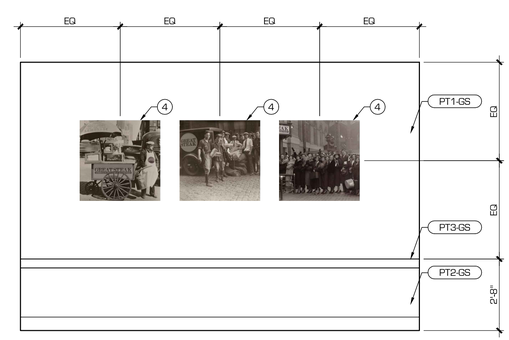

6 DINING ELEVATION

DINING.DWG SCALE: 3/8"=1'-0"

FRANCHISEE: _____ _____

SIGNATURE DATE

AD: _____ _____

SIGNATURE DATE

ELEVATION KEYED NOTES

1. NEW TEMPERED GLASS SNEEZE GUARD TOP AT 5'-0" MIN. A.F.F.
2. WALL MOUNTED HAND SINK W/ LIQUID SOAP DISPENSER AND PAPER TOWEL DISPENSER.
3. DIGIT MONITORS.
3A. DIGIT MONITORS W/ BUMPER BAR.
4. WALL MURAL.
5. SOFFIT LETTERING. ORDER THRU KAHALA.
6. START POINT OF NEW WALL TILE.
7. SOFFIT.
8. EQUIPMENT FOR REFERENCE REFER TO A1.0 FOR EQUIPMENT LAYOUT.
9. LIGHT BOX.
10. SS CLOSURE FOR WALK - IN TO CEILING
11. GREAT STEAK WALL MURAL PANEL.

WALL / MILLWORK FINISHES

NOTE: REFER TO INTERIOR ELEVATIONS, THIS SET, FOR ALL WALL FINISHES.

PL1-GS	LAMINATE WILSONART PAMPAS 4166-60 PLACEMENT: REAR SERICE CABINET FASCIA
PL2-GS	LAMINATE WILSONART DECORATIVE SATIN BRUSHED COPER ALUMINUM 6284 ALTERNATIVE: NUDO ELEMENTS BRUSHED COPPER PLACEMENT: FRONT OF COUNTERS AND EXHAUST HOOD
PL3-GS	LAMINATE WILSONART BLACK 1595K-18 PLACEMENT: FRONT COUNTER FASCIA
PL4-GS	LAMINATE WILSONART DESIGNER WHITE D3454-60 PLACEMENT: CABINET INTERIORS
PL1-SCS	LAMINATE WILSONART KENSINGTON MAPLE #10776-60 DIRECTION: VERTICAL PLACEMENT: FRONT OF SERVICE COUNTERS
PL2-SCS	LAMINATE WILSONART WILD CHERRY #7054-60 DIRECTION: VERTICAL PLACEMENT: FRONT OF SERVICE COUNTERS
SS	STAINLESS STEEL ALTERNATIVE: NUDO ELEMENTS BRUSHED SILVER PLACEMENT: BEHINE EQUIPMENT ON WORKING LINE (WHERE APPLICABLE)
SS-1	SOLID SURFACE WILSONART BLANCO RIVERSTONE 9137RS PLACEMENT: FRONT AND REAR COUNTERTOPS EDGE DETAIL: PENCIL ROUND
WT1-GS	EMSER VOGUE WHITE 4" X 16" GROUT: CUSTOM BUILDING GROUP #381 BRIGHT WHITE PLACEMENT: REAR SERVICE WALL
WT2-GS	EMSER FLASH RADIANT (LINEAR) 3" X 6" GROUT: CUSTOM BUILDING GROUP #381 BRIGHT WHITE PLACEMENT: FRONT COUNTER FASCIA
WT1-SCS	DAL-TILE WATER FALL #0169 SIZE: 3" X 6" GROUT: CUSTOM BUILDING GROUP #381 BRIGHT WHITE PLACEMENT: FOOD SERVICE AREA REAR WALL
NUDO	NUDO WALL PANEL BRUSHED SLIVER PLACEMENT: BEHIND EQUIPMENT ON WORKING LINE AND BASE. (WHERE INDICATED)
PT1-GS	MANUFACTURER: SHERWIN WILLIAMS TYPE: PRO MAR 200 ZERO VOC COLOR: DOVE WHITE #6385 SHEEN: EGGSHELL PLACEMENT: INTERIOR WALLS
FRP	NUDO FIBER-LITE WALL PANELS, WHITE EMBOSSED

© THIS DRAWING IS AN INSTRUMENT OF SERVICE AND THE PROPERTY OF BAR NAPKIN LLC. THE DRAWING MAY NOT BE REPRODUCED OR UTILIZED IN ANY MANNER WITHOUT THEIR WRITTEN PERMISSION.

bar napkin productions

2828 n central avenue
suite 1300
phoenix, az 85004
602 . 492 . 9494
www.bnp-llc.com

COMMONWEALTH OF VIRGINIA
PAUL L. BOSMAN
No. 0401-007885
ARCHITECT

GREAT STEAK SURF CITY SQUEEZE

STORE 7621 1946

PROJECT LOCATION

11800 WEST BROAD ST.
SUITE 2116
RICHMOND, VA 23233

	ISSUE DATE
CITY SUBMITTAL	08.29.16

INTERIOR ELEVATIONS

BN1309

A5.0

8/15/2016 11:20:16 AM - Z:\KAHALA BRANDS\GREAT STEAK\BN1309 GS SCS Richmond VA 7621 1946\GREAT STEAK_SURF CITY SQUEEZE\Sheets\A5.0 INTERIOR ELEVATIONS.dwg - Alfred Pettarson

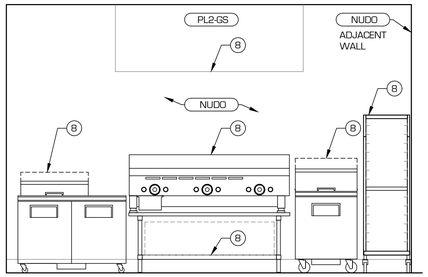

1 BOH AREA ELEVATION

CORRIDOR.DWG SCALE: 3/8"=1'-0"

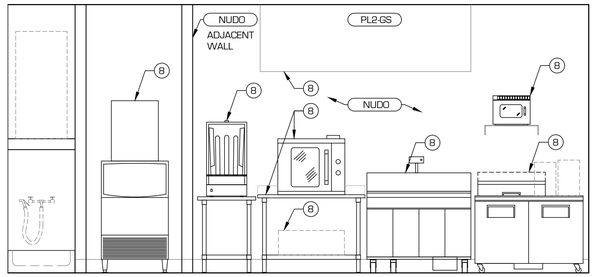

2 BOH AREA ELEVATION

CORRIDOR.DWG SCALE: 3/8"=1'-0"

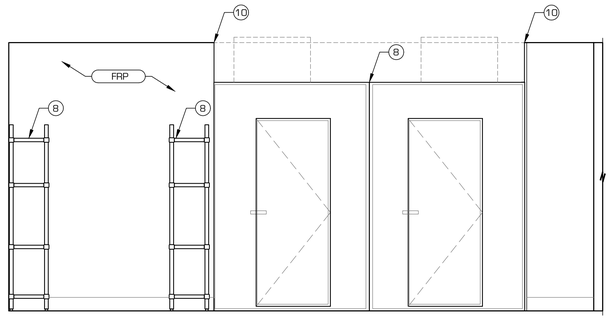

3 BOH AREA ELEVATION

CORRIDOR.DWG SCALE: 3/8"=1'-0"

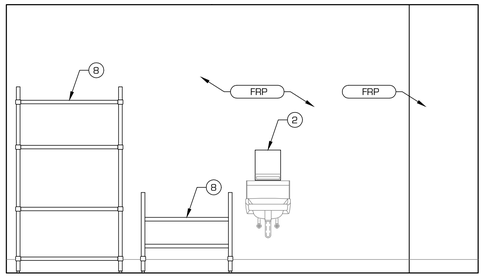

4 BOH AREA ELEVATION

CORRIDOR.DWG SCALE: 3/8"=1'-0"

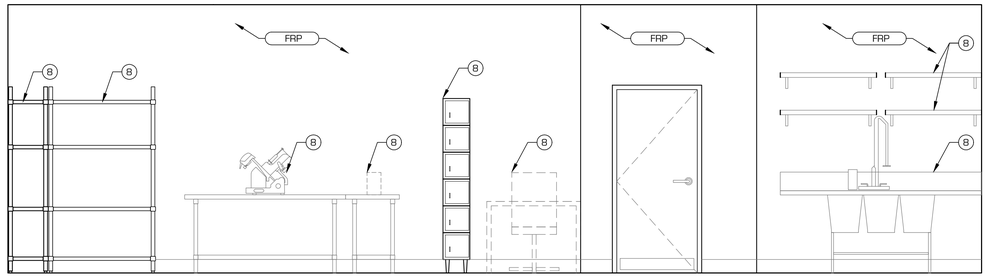

5 BOH AREA ELEVATION

CORRIDOR.DWG SCALE: 3/8"=1'-0"

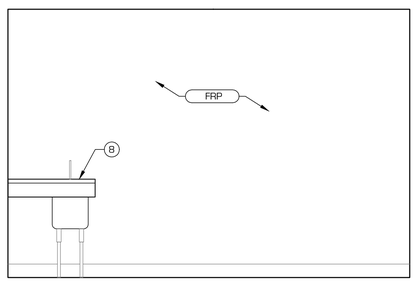

6 BOH AREA ELEVATION

CORRIDOR.DWG SCALE: 3/8"=1'-0"

FRANCHISEE: _____ _____

SIGNATURE DATE

AD: _____ _____

SIGNATURE DATE

ELEVATION KEYED NOTES

1. NEW TEMPERED GLASS SNEEZE GUARD TOP AT 5'-0" MIN. A.F.F.
2. WALL MOUNTED HAND SINK W/ LIQUID SOAP DISPENSER AND PAPER TOWEL DISPENSER.
3. DIGIT MONITORS.
3A. DIGIT MONITORS W/ BUMPER BAR.
4. WALL MURAL.
5. SOFFIT LETTERING. ORDER THRU KAHALA.
6. START POINT OF NEW WALL TILE.
7. SOFFIT.
8. EQUIPMENT FOR REFERENCE REFER TO A1.0 FOR EQUIPMENT LAYOUT.
9. LIGHT BOX.
10. SS CLOSURE FOR WALK - IN TO CEILING
11. GREAT STEAK WALL MURAL PANEL.

WALL / MILLWORK FINISHES

NOTE: REFER TO INTERIOR ELEVATIONS, THIS SET, FOR ALL WALL FINISHES.

PL1-GS	LAMINATE WILSONART PAMPAS 4166-60 PLACEMENT: REAR SERICE CABINET FASCIA
PL2-GS	LAMINATE WILSONART DECORATIVE SATIN BRUSHED COPER ALUMINUM 6284 ALTERNATIVE: NUDO ELEMENTS BRUSHED COPPER PLACEMENT: FRONT OF COUNTERS AND EXHAUST HOOD
PL3-GS	LAMINATE WILSONART BLACK 1595K-18 PLACEMENT: FRONT COUNTER FASCIA
PL4-GS	LAMINATE WILSONART DESIGNER WHITE D3454-60 PLACEMENT: CABINET INTERIORS
PL1-SCS	LAMINATE WILSONART KENSINGTON MAPLE #10776-60 DIRECTION: VERTICAL PLACEMENT: FRONT OF SERVICE COUNTERS
PL2-SCS	LAMINATE WILSONART WILD CHERRY #7054-60 DIRECTION: VERTICAL PLACEMENT: FRONT OF SERVICE COUNTERS
SS	STAINLESS STEEL ALTERNATIVE: NUDO ELEMENTS BRUSHED SILVER PLACEMENT: BEHINE EQUIPMENT ON WORKING LINE (WHERE APPLICABLE)
SS-1	SOLID SURFACE WILSONART BLANCO RIVERSTONE 9137RS PLACEMENT: FRONT AND REAR COUNTERTOPS EDGE DETAIL: PENCIL ROUND
WT1-GS	EMSER VOGUE WHITE 4" X 16" GROUT: CUSTOM BUILDING GROUP #381 BRIGHT WHITE PLACEMENT: REAR SERVICE WALL
WT2-GS	EMSER FLASH RADIANT (LINEAR) 3" X 6" GROUT: CUSTOM BUILDING GROUP #381 BRIGHT WHITE PLACEMENT: FRONT COUNTER FASCIA
WT1-SCS	DAL-TILE WATER FALL #0169 SIZE: 3" X 6" GROUT: CUSTOM BUILDING GROUP #381 BRIGHT WHITE PLACEMENT: FOOD SERVICE AREA REAR WALL
NUDO	NUDO WALL PANEL BRUSHED SLIVER PLACEMENT: BEHIND EQUIPMENT ON WORKING LINE AND BASE. (WHERE INDICATED)
PT1-GS	MANUFACTURER: SHERWIN WILLIAMS TYPE: PRO MAR 200 ZERO VOC COLOR: DOVE WHITE #6385 SHEEN: EGGSHELL PLACEMENT: INTERIOR WALLS
FRP	NUDO FIBER-LITE WALL PANELS, WHITE EMBOSSED

© THIS DRAWING IS AN INSTRUMENT OF SERVICE AND THE PROPERTY OF BAR NAPKIN,LLC. THIS DRAWING MAY NOT BE REPRODUCED OR UTILIZED IN ANY MANNER WITHOUT THEIR WRITTEN PERMISSION.

bar napkin productions

2828 n central avenue
suite 1300
phoenix, az 85004
602 . 492 . 9494
www.bnp-llc.com

COMMONWEALTH OF VIRGINIA
PAUL L. BOSMAN
No. 0401-007885
ARCHITECT

GREAT STEAK SURF CITY SQUEEZE

STORE 7621 1946

PROJECT LOCATION

11800 WEST BROAD ST.
SUITE 2116
RICHMOND, VA 23233

	ISSUE DATE
CITY SUBMITTAL	08.29.16

INTERIOR ELEVATIONS

BN1309

A5.1

8/15/2016 11:20:13 AM - Z:_KAHALA BRANDS_GREAT STEAK_BN1309 GS SCS Richmond VA 7621 1946_GREAT STEAK SURF CITY SQUEEZE\Sheets\A5.1 INTERIOR ELEVATIONS.dwg - Alfred Patterson

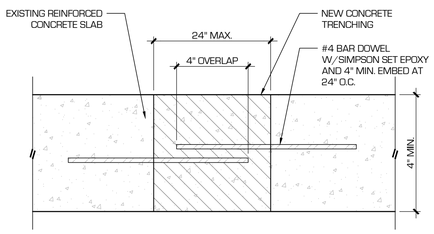

1 CONCRETE DOWELING AT NEW SLAB

FLR-CONC TRENCH.DWG SCALE: 3"=1'-0"

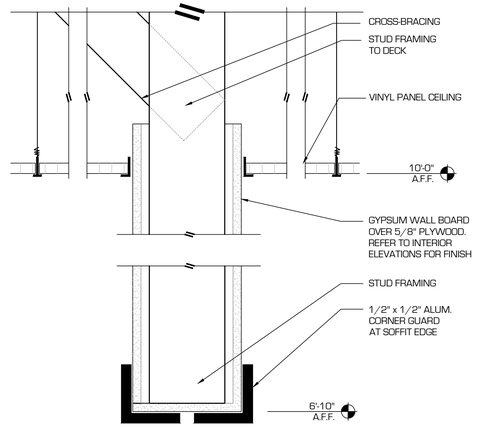

2 SOFFIT DETAIL

SCALE: 3"=1'-0"

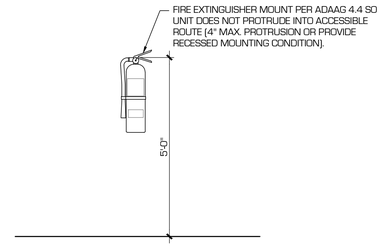

3 FIRE EXTINGUISHER (WALL MOUNTED)

ENL-FIRE EXT.DWG SCALE: 1/2"=1'-0"

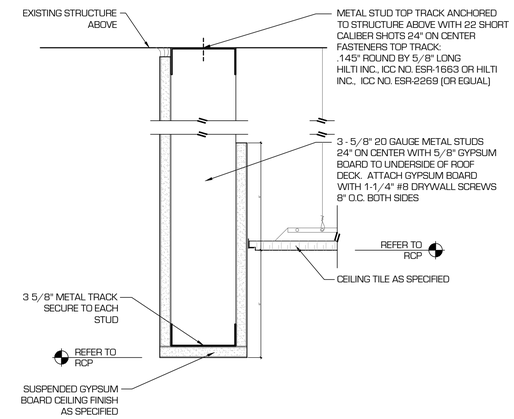

4 CEILING HEADER

CLG-HEADER.DWG SCALE: 3"=1'-0"

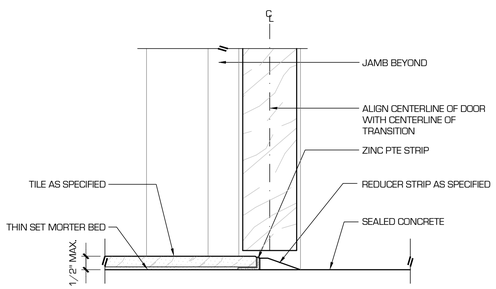

5 TILE TO CONCRETE TRANSITION

FLR-CT_CONC_DR.DWG SCALE: 6"=1'-0"

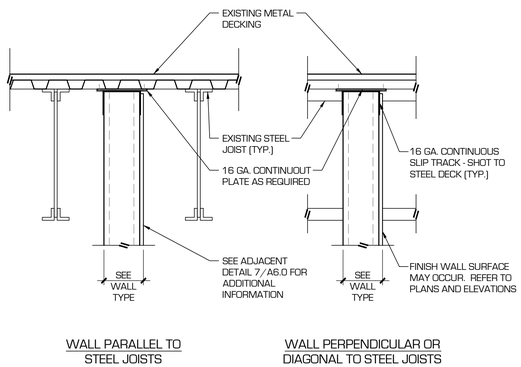

6 SOFFIT TRACK DETAIL

CLG-SOFFIT TRACK.DWG SCALE: 1"=1'-0"

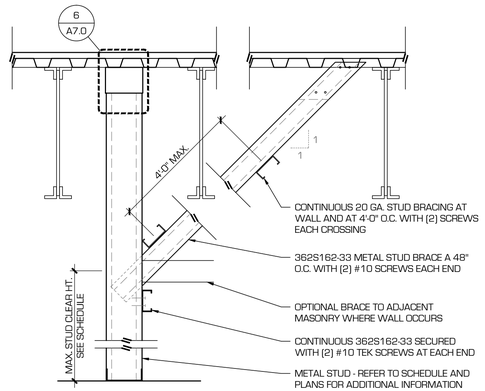

7 STUD WALL BRACING DETAIL

PTN-STUD BRACING.DWG SCALE: 1"=1'-0"

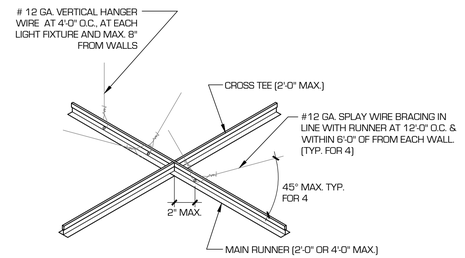

NOTES:
WIRES SHALL BE ATTACHED TO SUSPENDED MEMBERS WITH A MINIMUM OF THREE TURNS.

VERTICAL STRUT SHALL BE INSTALLED AT EACH SET OF SPLAY WIRES - 200 POUND DESIGN FORCE.

FOR EVERY WIRE WHICH CANNOT BE INSTALLED DUE TO DUCT, ETC., INSTALL MIN. OF BACK TO BACK 1-1/4' COLD ROLLED CHANNELS FOR SPANS EXCEEDING 48 INCHES.

NOTES:
ALL STRUCTURAL MEMBERS OF CEILING SYSTEM SHALL COMPLY WITH THE DIRECT HUNG LOADING AND DEFLECTION TEST REQUIRED IN ASTM C635/C636

8 SUSPENDED CEILING BRACING

CLG-BRACING.DWG SCALE: 1-1/2"=1'-0"

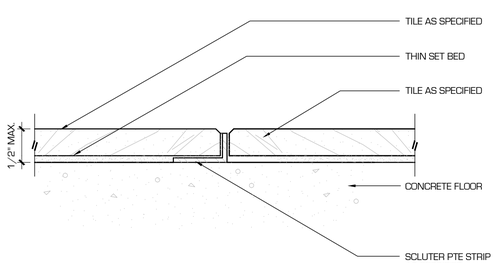

9 TILE TO TILE TRANSITION

FLR-CT_CT.DWG SCALE: FULL

FRANCHISEE: _____ _____
SIGNATURE DATE

AD: _____ _____
SIGNATURE DATE

bnp
bar napkin productions

2828 n central avenue
suite 1300
phoenix, az 85004
602 . 492 . 9494
www.bnp-llc.com

GREAT STEAK ®

SURF CITY SQUEEZE SMOOTHIES

COMMONWEALTH OF VIRGINIA
PAUL L. BOSMAN
No. 0401-007885
ARCHITECT

GREAT STEAK SURF CITY SQUEEZE

STORE 7621 1946

PROJECT LOCATION

11800 WEST BROAD ST.
SUITE 2116
RICHMOND, VA 23233

	ISSUE DATE
CITY SUBMITTAL	08.29.16

ARCHITECTURAL DETAILS

BN1309

A7.0

© THIS DRAWING IS AN INSTRUMENT OF SERVICE AND THE PROPERTY OF BAR NAPKIN LLC. THIS DRAWING MAY NOT BE REPRODUCED OR UTILIZED IN ANY MANNER WITHOUT THEIR WRITTEN PERMISSION.

8/15/2016 11:20:09 AM - Z:\KAHALA BRANDS\GREAT STEAK\BN1309 GS SCS Richmond VA 7621 1946\GREAT STEAK SURF CITY SQUEEZE\Sheets\A7.0 ARCHITECTURAL DETAILS.dwg Alfred Patterson

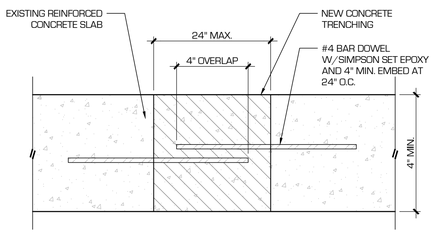

1 CONCRETE DOWELING AT NEW SLAB

FLR-CONC TRENCH.DWG SCALE: 3"=1'-0"

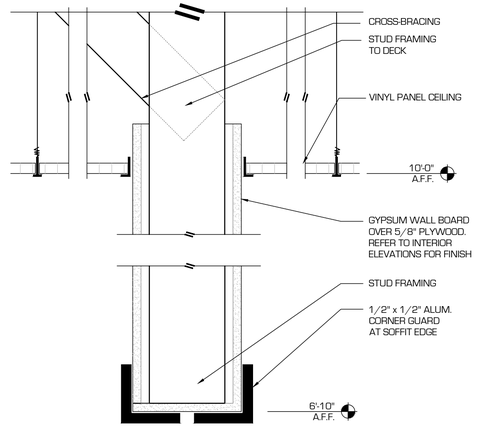

2 SOFFIT DETAIL

SCALE: 3"=1'-0"

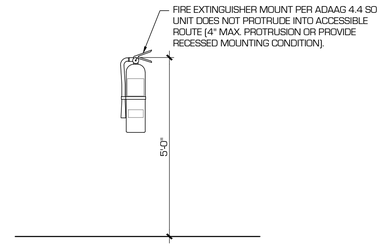

3 FIRE EXTINGUISHER (WALL MOUNTED)

ENL-FIRE EXT.DWG SCALE: 1/2"=1'-0"

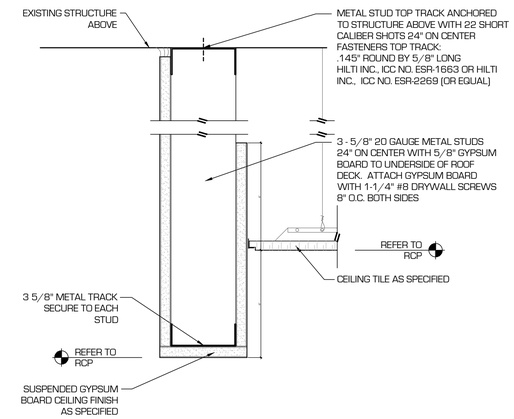

4 CEILING HEADER

CLG-HEADER.DWG SCALE: 3"=1'-0"

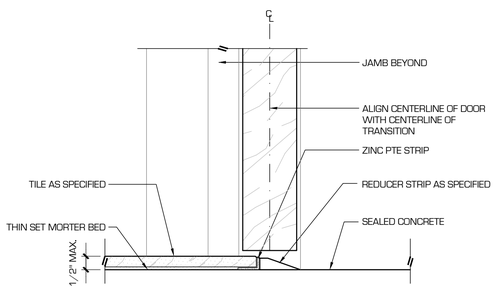

5 TILE TO CONCRETE TRANSITION

FLR-CT_CONC_DR.DWG SCALE: 6"=1'-0"

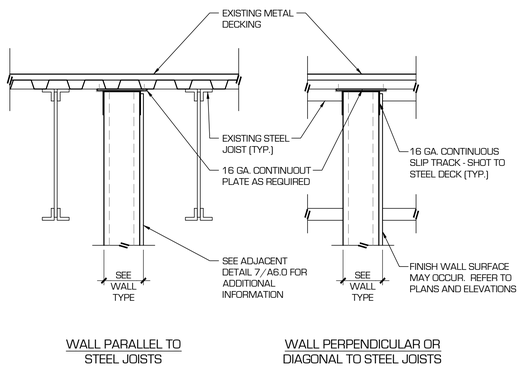

6 SOFFIT TRACK DETAIL

CLG-SOFFIT TRACK.DWG SCALE: 1"=1'-0"

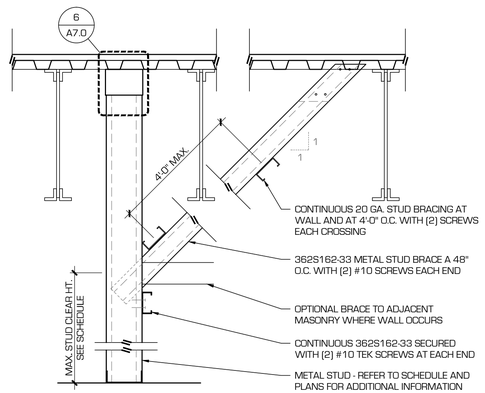

7 STUD WALL BRACING DETAIL

PTN-STUD BRACING.DWG SCALE: 1"=1'-0"

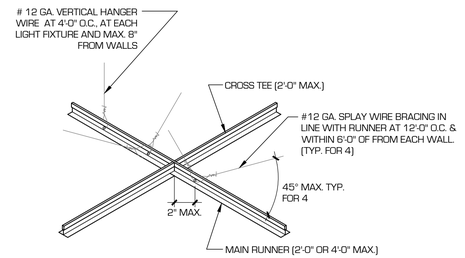

NOTES:
WIRES SHALL BE ATTACHED TO SUSPENDED MEMBERS WITH A MINIMUM OF THREE TURNS.

VERTICAL STRUT SHALL BE INSTALLED AT EACH SET OF SPLAY WIRES - 200 POUND DESIGN FORCE.

FOR EVERY WIRE WHICH CANNOT BE INSTALLED DUE TO DUCT, ETC., INSTALL MIN. OF BACK TO BACK 1-1/4' COLD ROLLED CHANNELS FOR SPANS EXCEEDING 48 INCHES.

NOTES:
ALL STRUCTURAL MEMBERS OF CEILING SYSTEM SHALL COMPLY WITH THE DIRECT HUNG LOADING AND DEFLECTION TEST REQUIRED IN ASTM C635/C636

8 SUSPENDED CEILING BRACING

CLG-BRACING.DWG SCALE: 1-1/2"=1'-0"

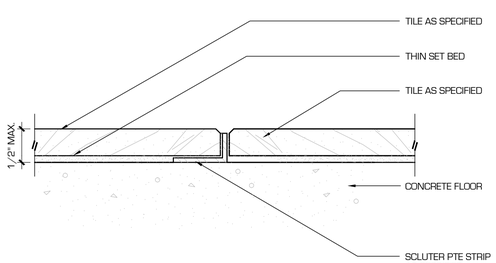

9 TILE TO TILE TRANSITION

FLR-CT_CT.DWG SCALE: FULL

FRANCHISEE: _____ _____
SIGNATURE DATE

AD: _____ _____
SIGNATURE DATE

bnp
bar napkin productions

2828 n central avenue
suite 1300
phoenix, az 85004
602 . 492 . 9494
www.bnp-llc.com

GREAT STEAK ®

SURF CITY SQUEEZE SMOOTHIES

COMMONWEALTH OF VIRGINIA
PAUL L. BOSMAN
No. 0401-007885
ARCHITECT

GREAT STEAK SURF CITY SQUEEZE

STORE 7621 1946

PROJECT LOCATION

11800 WEST BROAD ST.
SUITE 2116
RICHMOND, VA 23233

	ISSUE DATE
CITY SUBMITTAL	08.29.16

ARCHITECTURAL DETAILS

BN1309

A7.0

© THIS DRAWING IS AN INSTRUMENT OF SERVICE AND THE PROPERTY OF BAR NAPKIN LLC. THIS DRAWING MAY NOT BE REPRODUCED OR UTILIZED IN ANY MANNER WITHOUT THEIR WRITTEN PERMISSION.

8/30/2016 3:16:56 PM - Z:_KAHALA BRANDS_GREAT STEAK_BN1309 GS SCS Richmond VA 7621 1946_GREAT STEAK_SURF CITY SQUEEZE_Sheets\A7.0 ARCHITECTURAL DETAILS.dwg - Alfred Patterson

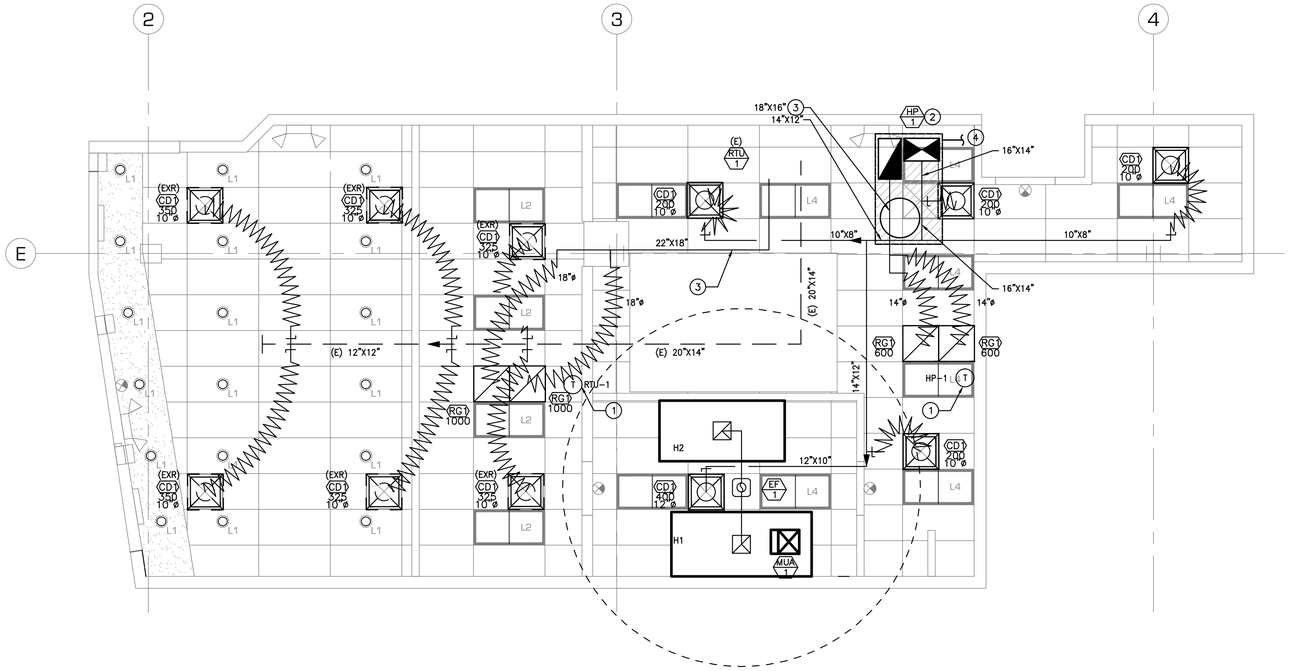

MECHANICAL PLAN

1/4" = 1'-0"

NORTH

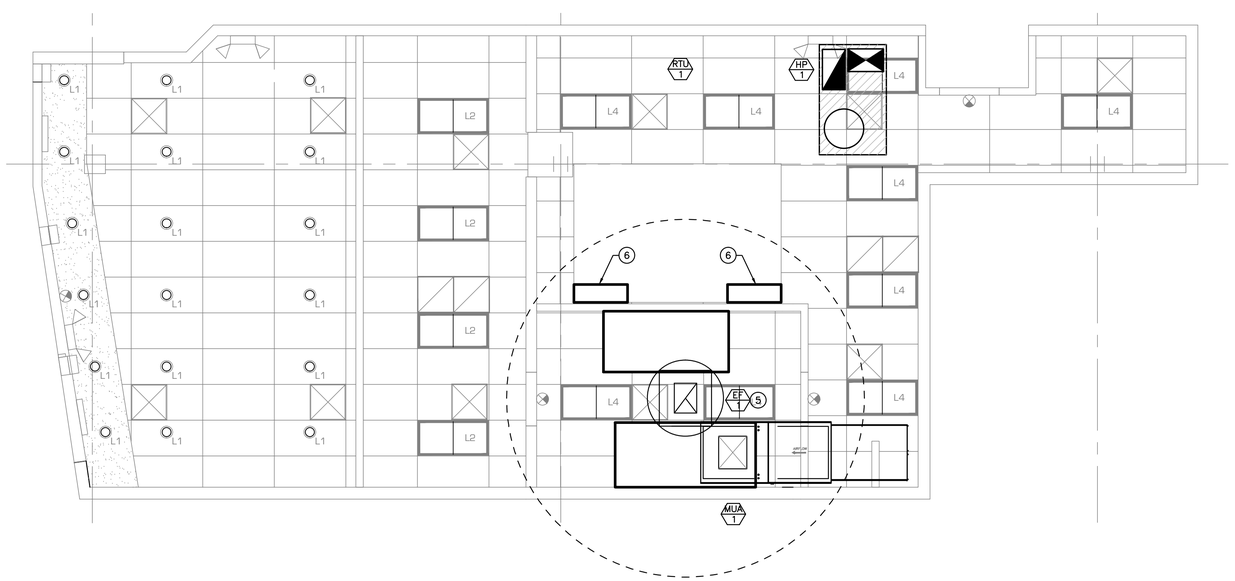

MECHANICAL ROOF PLAN

1/4" = 1'-0"

NORTH

FRANCHISEE: _____ _____

SIGNATURE DATE

AD: _____ _____

SIGNATURE DATE

HVAC CONTROL SETTINGS

EACH HVAC UNIT SHALL BE PROVIDED WITH CONTROLS AS : FOLLOWS:

THERMOSTAT: COMMERCIAL PROGRAMMABLE THERMOSTAT WITH REMOTE TEMPERATURE SENSOR. SEE PLAN FOR THERMOSTAT AND SENSOR LOCATIONS. (THERMOSTAT WITH AUTOMATIC SETBACK WHEN LIGHT ARE TURNED DOWN, MANUAL OVERRIDE.)

ALL THERMOSTATS SHALL HAVE MANUAL OVERRIDE.

EACH UNIT CONTROL SHALL BE SET UP INITIALLY AS FOLLOWS:

CONTRACTOR SHALL DETERMINE OCCUPIED PERIOD FROM OWNER.

FAN OPERATION SHALL BE CONTINUOUS DURING OCCUPIED PERIOD AND CYCLE WITH COOLING/HEATING DURING UNOCCUPIED PERIOD.

PROGRAMMED SETPOINTS (FOR EACH THERMOSTAT):

COOLING OCCUPIED:	75 DEGREES F.
COOLING UNOCCUPIED:	80 DEGREES F.
HEATING OCCUPIED:	N/A.
HEATING UNOCCUPIED:	N/A.

NOTE: DEVIATIONS FROM THE ABOVE MAY RESULT IN UNACCEPTABLE AIR QUALITY, COMFORT AND/OR ENERGY CONSUMPTION.

KEYED NOTES

1. PROVIDE THERMOSTAT FOR R.T.U. – COORDINATE RECESSED "J" BOX WITH ALL FINISH WALL MATERIALS/DEVICES . PROVIDE FULL PERIMETER CAULKING AT ALL WALL OPENINGS – PROVIDE SENSOR AT EACH RETURN AIR GRILLE TYP. – EXTEND T–STAT WIRE FROM SENSOR TO THERMOSTAT LOCATION PER PLAN.
2. PROVIDE ROOF MOUNTED HEAT PUMP PER SCHEDULE ON SHEET M2 – CONTRACTOR TO VERIFY EXACT LOCATION.
3. PROVIDE INTERNAL MINERAL FIBER INSULATION TO ACHIEVE AMINIMUM R–8 VALUE AS REQUIRED TO MEET LOCAL CODE.
4. RUN 3/4" MINIMUM COPPER CONDENSATE PIPING AT 1/4"/FT TO OWNER APPROVED LOCATION (TYP.). SUPPORT PIPING AS REQUIRED PROVIDE 2" AIR GAP.
5. OFFSET EXHAUST FAN LOCATION ON ROOF TO ENSURE 10'–0" MINIMUM CLEAR FROM ANY OUTSIDE AIR INTAKE.
6. ROOF MOUNTED WALK–IN COMPRESSOR TO BE SUPPLIED BY OTHERS.

GENERAL NOTES

1. HVAC CONTRACTOR TO COORDINATE INSTALLATION WITH ALL TRADES.
2. CONTRACTOR TO FIELD VERIFY EXACT PLACEMENT OF EXISTING ROOFTOP EQUIPMENT.
3. PROVIDE REQUIRED AUTO SHUT–OFF SPECIAL INSPECTION OF OPERATION PER IBC 606.6.
4. PERMANENT ROOF ACCESS IS PROVIDED VIA A ROOF LADDER LOCATED IN SHELL BUILDING.
5. ALL WORK TO COMPLY WITH THE 2012 INTERNATIONAL MECHANICAL CODE, AND ALL CITY OF CHANDLER ADOPTED CODES AND AMENDMENTS, SEC. 106.3.1
6. CALL FOR INSPECTION OF ALL MECHANICAL SYSTEMS PRIOR TO BACKFILL AND CONCEALMENT 2012 IMC 107.2
7. SMOKE DETECTORS SHALL BE INSTALLED IN RETURN AIR SYSTEMS WITH A DESIGN CAPACITY GREATER THAN 2,000 CFM, IN THE RETURN AIR DUCT OR PLENUM UPSTREAM OF ANY FILTERS, EXHAUST AIR CONNECTIONS, OUTDOOR AIR CONNECTIONS, OR DECONTAMINATION EQUIPMENT AND APPLIANCES PER IMC 606.2.1.
8. SMOKE DETECTORS TO CONNECT TO FIRE ALARM SYSTEM AND ACTIVATE A SUPERVISORY ALARM UPON ACTIVATION PER IMC 606.4.

LEGEND

- SUPPLY AIR DIFFUSER
- RETURN AIR GRILLE 24x24
- SUPPLY AIR DIFFUSER
- EXHAUST AIR GRILLE
- NEW TEMPERATURE SENSOR
- SMOKE DETECTOR

2012 IECC COMPLIANCE NOTES

1. PROVIDE MINIMUM R–5 INSULATION FOR ALL SUPPLY AND DUCTS OR PLENUMS IN UNCONDITIONED SPACES. PROVIDE MINIMUM R–8 INSULATION FOR ANY EXTERIOR DUCT WORK. DUCTS OR PLENUMS LOCATED WITHIN A BUILDING ENVELOPE ASSEMBLY MUST HAVE A MINIMUM R–8 SEPARATION BETWEEN DUCT AND EXTERIOR AND/OR UNCONDITIONED SPACES WITH 16 DEGREE OR GREATER TEMPERATURE DIFFERENCE, OR PROVIDE R–8 INSULATION FOR DUCTS AND PLENUMS. (PER 2012 IECC 503.2.7.)

2. PROVIDE AUTOMATIC CHANGEOVER 7–DAY PROGRAMMABLE THERMOSTATS BY EQUIPMENT MANUFACTURER WITH 2–HOUR OCCUPANT OVERRIDE AND 10–HOUR MINIMUM BATTERY BACKUP. PROGRAM SETBACK TEMPERATURES TO 85°F(COOL) AND 55°F(HEAT). ALL TEMPERATURE CONTROLS ARE TO BE TESTED, ADJUSTED, AND CALIBRATED FOR PROPER OPERATION. MOUNT ALL THERMOSTATS AND TEMPERATURE SENSORS AS INDICATED ON THE DRAWINGS. COORDINATE EXACT LOCATION WITH THE ARCHITECT. PROVIDE LOCKING COVER AS REQUIRED BY THE ARCHITECT OR THE OWNER. MOUNT BETWEEN 48"–54" AFF. (PER 2012 IECC 503.3.2.4.)

3. WHERE MECHANICAL VENTILATION IS PROVIDED, THE SYSTEM SHALL PROVIDE THE CAPABILITY TO REDUCE THE OUTDOOR AIR SUPPLY TO THE MINIMUM REQUIRED BY CHAPTER 4 OF THE INTERNATIONAL MECHANICAL CODE. (PER 2012 IECC 503.2.5) OUTDOOR AIR SUPPLY AND EXHAUST DUCTS SHALL BE PROVIDED WITH AUTOMATIC MEANS TO REDUCE AND SHUT OFF AIRFLOW. (PER 2012 IECC 503.2.4.4)

4. SEALING DUCTWORK: ALL JOINTS, LONGITUDINAL AND TRANSVERSE SEAMS AND CONNECTIONS IN DUCTWORK MUST BE SECURELY SEALED USING WELDMENTS; MECHANICAL FASTENERS WITH SEALS, GASKETS OR MASTICS; MESH AND MASTIC SEALING SYSTEMS; OR TAPES. TAPES AND MASTICS MUST BE LISTED AND LABELED IN ACCORDANCE WITH UL 181A OR 181B. (PER 2012 IECC 503.2.7)

5. PROVIDE OWNER WITH COMPLETE OPERATION AND MAINTENANCE MANUALS FOR ALL EQUIPMENT AND CONTROLS INSTALLED. DOCUMENTATION MUST INCLUDE EQUIPMENT CAPACITY (INPUT & OUTPUT), REQUIRED MAINTENANCE ACTIONS, CONTROLS AND CALIBRATION INFORMATION INCLUDING WIRING DIAGRAMS, CONTROL SEQUENCE DESCRIPTIONS, DESIRED OR FIELD–DETERMINED SETPOINTS, AND A COMPLETE NARRATIVE OF HOW EACH SYSTEM IS INTENDED TO OPERATE. (PER 2012 IECC 503.2.9.3)

AIR BALANCE

VENTILATION SYSTEMS SHALL BE BALANCED BY AN APPROVED METHOD. A BALANCE REPORT SHALL VERIFY THAT THE VENTILATION SYSTEM IS CAPABLE OF SUPPLYING AIRFLOW RATES. THIS BALANCE REPORT SHALL BE SIGNED AND SEALED BY AN ENGINEER AND SUBMITTED TO THE MECHANICAL INSPECTOR FOR FINAL INSPECTION APPROVAL.

Design Management Solutions LLC

THESE DRAWINGS AND ASSOCIATED DOCUMENTATION CONTAIN INFORMATION, DESIGNS, CONCEPTS, AND DATA THAT ARE THE SOLE PROPERTY OF DESIGN MANAGEMENT SOLUTIONS LLC. THEY MUST NOT BE DISCLOSED OR BE USED FOR ANY PURPOSE OTHER THAN ORIGINALLY INTENDED WITHOUT THE EXPRESSED WRITTEN CONSENT AND PERMISSION OF THE ENGINEER AND DESIGN MANAGMENT SOLUTIONS LLC.

DMS#E0525 016–164
DFT: RSM
DSN: RSM
CHK: GL

© THIS DRAWING IS AN INSTRUMENT OF SERVICE AND THE PROPERTY OF BAR NAPKIN LLC. THIS DRAWING MAY NOT BE REPRODUCED OR UTILIZED IN ANY MANNER WITHOUT THEIR WRITTEN PERMISSION.

bar napkin productions

2828 n central avenue
suite 1300
phoenix, az 85004
602 . 492 . 9494
www.bnp-llc.com

COMMONWEALTH OF VIRGINIA
MICHAEL M. NAKHLA
No. 043706
PROFESSIONAL ENGINEER

Tue Aug 16 2016 11:53:46

GREAT STEAK SURF CITY SQUEEZE

STORE 7621 1946

PROJECT LOCATION

11800 WEST BROAD ST.
SUITE 2116
RICHMOND, VA 23233

ISSUE DATE	
CITY SUBMITTAL	07.29.16

MECHANICAL PLAN

BN1309

M-1

8/16/2016 10:46:06 AM - C:\ Backup\Dropbox\DMS Dropbox Projects\016-164 Surf City Squeeze GREAT STEAK Virginia\DWG\Dck\016-164 Surf City Squeeze And Steakhouse - M.dwg - Sam

COM*check* Software Version 4.0.2.5

Mechanical Compliance Certificate

Project Information

Energy Code: 2012 IECC
Project Title:
Location: Richmond, Virginia
Climate Zone: 4a
Project Type: Addition

Construction Site: Owner/Agent: Designer/Contractor:

Mechanical Systems List

Quantity System Type & Description

1 HVAC System 1 (Single Zone):
Single Package Heat Pump
Heating Mode: Capacity = 26 kBtu/h,
Proposed Efficiency = 7.70 HSPF, Required Efficiency = 7.70 HSPF
Cooling Mode: Capacity = 32 kBtu/h,
Proposed Efficiency = 13.00 SEER, Required Efficiency = 13.00 SEER
Fan System: None

Mechanical Compliance Statement

Compliance Statement: The proposed mechanical design represented in this document is consistent with the building plans, specifications, and other calculations submitted with this permit application. The proposed mechanical systems have been designed to meet the 2012 IECC requirements in COM*check* Version 4.0.2.5 and to comply with the mandatory requirements listed in the Inspection Checklist.

Samuel Felix, Designer — Name - Title
Samuel Felix — Signature
8-16-16 — Date

PACKAGED COOLING UNIT WITH ELECTRIC HEAT SCHEDULE

HP –

MARK	NOMINAL TONS	MANUF./ MODEL #	AIR CAPACITIES				MIN ARI 240 EER (BTUH/W)	CYCLE	HEATING/COOLING CAPACITIES						ELECTRICAL DATA			LBS.	REMARKS
			TOTAL CFM	OA CFM	ESP IWG	APPROX. BLOWER HP			ENT AIR		AMBIENT		BTUH		MAX FLA	MCA/MOCP	VOLT/Ø		
									DB	WB	DB	WB	TOTAL	SENSIBLE					
1	5	EXISTING –	2000	500	0.5	1-1/2	13 SEER	COOL	–	–	–	–	–	–	–	–	460/3	670 W/CURB	1-3
								HEAT	–	–	–	–	–	–					

NOTES:
1. PROVIDE UNIT NIGHT SETBACK/PROGRAMMABLE T-STAT AND DUCT SMOKE DETECTORS.
2. SET UNITS T-STAT OPERATION TO "ON" PER IMC 403.2, 403.3

PACKAGED HEAT PUMP UNIT SCHEDULE

HP –

MARK	NOMINAL TONS	MANUF./ MODEL #	AIR CAPACITIES				MIN ARI 240 EER (BTUH/W)	CYCLE	HEATING/COOLING CAPACITIES						ELECTRICAL DATA				LBS.	REMARKS
			TOTAL CFM	OA CFM	ESP IWG	APPROX. BLOWER HP			ENT AIR		AMBIENT		BTUH		MAX FLA	MCA	MOCP	VOLT/Ø		
									DB	WB	DB	WB	TOTAL	SENSIBLE						
1	3	CARRIER 50TCQA04-2	1200	300	0.5	1	13 SEER	COOL	–	–	115	67	32.0	30.6	9.0	11.0	15.0	460/3	620 W/CURB	–
								HEAT	–	–	30	–	26.1	–						

NOTES:
1. PROVIDE UNIT NIGHT SETBACK/PROGRAMMABLE T-STAT AND DUCT SMOKE DETECTORS.
2. SET UNITS T-STAT OPERATION TO "ON" PER IMC 403.2, 403.3
3. PROVIDE UNIT WITH 12" CURB.

FAN SCHEDULE

EF –

MARK	MANUF./ MODEL #	TYPE	CFM	E.S.P.	AMPS/ WATTS	VOLT Ø	B.D.D.	DRIVE	OPER. WT.	REMARKS
EF-1	SEE CAPTIVE AIRE SHTS	ROOF	2200	–	–	–	–	–	–	SEE CAPTIVE AIRE SHEETS INTERLOCK W/ H-1, H-2 & MUA-1
MUA-1	SEE CAPTIVE AIRE SHTS	ROOF	2200	–	–	–	–	–	–	SEE CAPTIVE AIRE SHEETS INTERLOCK W/ H-1, H-2 & EF-1

PROVIDE ALL WITH BIRDSCREEN, 12" HIGH PRE-FAB CURB, SAFETY DISCONNECT OR MOTOR RATED SWITCH, AND ENSURE 10' MIN CLEARANCE FROM ALL AIR IN TAKES

GRILLE, REGISTER, & DIFFUSER SCHEDULE

MARK	MANUF./ MODEL #	DESCRIPTION	FRAME	FINISH	MATERIAL	DAMPER	MAX. NC	REMARKS
CD-1	PRICE SCD3	SUPPLY DIFFUSER	LAY-IN	PER ARCHITECT	STEEL	–	28	–
CD-2	PRICE RCDE	SUPPLY DIFFUSER	–	PER ARCHITECT	STEEL	–	28	–
RG-1	PRICE 230 SERIES	RETURN GRILLE	LAY-IN	PER ARCHITECT	STEEL	–	–	1/2" SPACING W/ 35° DEFLECTION
RG-2	PRICE 230 SERIES	RETURN GRILLE	SURFACE	PER ARCHITECT	STEEL	–	–	1/2" SPACING W/ 35° DEFLECTION

Ventilation Calculations 2012 IMC Chapter 4

Room #	Room Name		Space Type	Floor area of zone ft2 Az	Zone population Pz	Actual zone population (Pz/1000)*Az Aza	People outdoor rate Rp	Area of outdoor air Ra	Pz*Rp	Az*Ra	Outdoor effectiveness Voz	Primary airflow from airhandler to zone Vpzm or Vpz	Supply to Zone Vdz	Minimum Supply to zone Vdzm	Outdoor air fraction required Zd	Primary outdoor air fraction Voz/Vpzm Zp	Primary air fraction(= 1 for single duct) Ep	Faction of secondary recirc to zone (if plenum return 0) Er	Zone air distribution effectiveness Ez	Fraction off supply air to zone Fa	Fb	Fc	Zone Ventilation efficiency Evrz
RESTAURANT																							
	Dining	Dining Room		406	70	28	7.5	0.18	525	73.08	616.35	2000	2000	2000	0.308175	0.308175	1	1	0.8	1	1		1.170494
	Kitchen			907	0	0						1200	1200	1200	0	0	1	1	0.8	1	1		1
Totals				1313		28			525	73.08	616.35	3200	3200	3200									

SYSTEM LEVEL

Aza	System population	28
D	Occupant Diversity	0.9
Vou	Uncorrected OSA	545.58
	Constant Air Flow	CAV
Vps	Total System Primary	3200
Xs	Mixing RATIO	0.170494

SYSTEM EFFICIENCY

Max Zp	Greatest value:	0.308175
Ev	System Ventilation efficiency based on max Zp	0.9
Vot	Minuimum Outdoor intake Vou/Eb cfm	684.8333
Percent Outdoor air intake	Vot/Vps	0.21401

RESULTS

Vot	Min OSA intake	684.8333
	Percent OSA Vot/Vps	0.21401
Ev	System Ventilation Efficiency	0.9

MINIMUM EXHAUST REQUIREMENTS

Prep Area:	200 sq. ft.	x	0.7	140	CFM REQUIRED
Appliances*	200 sq. ft.	x	0.7	140	CFM REQUIRED
Total*, **		=		280	CFM PROVIDED

**Note the kitchen exhaust fan via hoods will account for the required exhaust for prep area and appliances per IMC.

Kitchen (H1 & H2)	2200 CFM	x	1	2200	CFM REQUIRED
Kitchen (H1 & H2)	2200 CFM	x	1	2200	CFM PROVIDED
	2200 TOTAL EXHAUST REQUIRED				
	2200 TOTAL EXHAUST PROVIDED				

*COOKING APPLIANCES THAT DO NOT REQUIRE A TYPE II HOOD:
(Coffee maker, Smoothie Machine, note not all items on equipment schedule apply to this project)

AIR BALANCE

SUPPLY AIR		3200
OUTSIDE AIR		800
RETURN AIR		3200
RELATIVE PRESSURE		0
EXHAUST AIR PROVIDED	-	2200
MAKE UP AIR PROVIDED		2200
SPACE PRESSURE:		0

PRESSURE PRECEDED BY A (-) IS NEGATIVE
PRESSURE WITHOUT A SYMBOL IS POSITIVE.

FRANCHISEE: _____ _____
SIGNATURE DATE
AD: _____ _____
SIGNATURE DATE

Design Management Solutions LLC

THESE DRAWINGS AND ASSOCIATED DOCUMENTATION CONTAIN INFORMATION, DESIGNS, CONCEPTS, AND DATA THAT ARE THE SOLE PROPERTY OF DESIGN MANAGEMENT SOLUTIONS LLC. THIS INFORMATION MAY NOT BE USED FOR ANY PURPOSE OTHER THAN THE ORIGINALLY INTENDED WITHOUT THE EXPRESSED WRITTEN CONSENT AND PERMISSION OF THE ENGINEER AND DESIGN MANAGEMENT SOLUTIONS LLC.

DMS#E0525 016-164
DFT: RSM
DSN:RSM
CHK:GL

© THIS DRAWING IS AN INSTRUMENT OF SERVICE AND THE PROPERTY OF BAR NAPKIN LLC. THIS DRAWING MAY NOT BE REPRODUCED OR UTILIZED IN ANY MANNER WITHOUT THEIR WRITTEN PERMISSION.

bar napkin productions
2828 n central avenue
suite 1300
phoenix, az 85004
602 . 492 . 9494
www.bnp-llc.com

COMMONWEALTH OF VIRGINIA
MICHAEL M. NAKHLA
No. 043706
PROFESSIONAL ENGINEER
Tue Aug 16 2016 11:53:14

GREAT STEAK SURF CITY SQUEEZE

STORE 7621 1946

PROJECT LOCATION
11800 WEST BROAD ST.
SUITE 2116
RICHMOND, VA 23233

ISSUE DATE
CITY SUBMITTAL 07.29.16

MECHANICAL SCHEDULES COM CHECK

BN1309

M-2

8/16/2016 10:46:05 AM - C:\Backup\Dropbox\DMS Dropbox Projects\016-164 Surf City Squeeze GREAT STEAK Virginna\DMS CDs\016-164 Surf City Squeeze And Steakhouse M-Mvg - Sam

HOOD INFORMATION – Job#2741856

HOOD NO.	TAG	MODEL	LENGTH	MAX. COOKING TEMP.	EXHAUST PLENUM RISER(S) TOTAL EXH. CFM	WIDTH	LENG.	HEIGHT	DIA.	CFM	S.P.	TOTAL SUPPLY CFM	HOOD CONSTRUCTION	HOOD CONFIG. END TO END	ROW
1	Fryer	4830 ND-2-PSP-F	7' 10.00"	450 Deg.	1567	10"	15"	4"		1567	-0.614"	1332	430 SS Where Exposed	ALONE	ALONE
2	Griddle	5430 ND-2-PSP-SS	7' 0.00"	600 Deg.	1645	10"	15"	4"		1645	-0.677"	1448	430 SS Where Exposed	ALONE	ALONE

HOOD INFORMATION

HOOD NO.	TAG	FILTER(S) TYPE	QTY.	HEIGHT	LENGTH	EFFICIENCY @ 9 MICRONS	LIGHT(S) QTY.	TYPE	WIRE GUARD	UTILITY CABINET(S) LOCATION	SIZE	FIRE SYSTEM TYPE	SIZE	ELECTRICAL MODEL #	SWITCHES QUANTITY	FIRE SYSTEM PIPING	HOOD HANGING WGHT
1	Fryer	Captrate Solo Filter	5	20"	16"	93% See Filter Spec.	3	L55 Series E26	NO							NO	512 LBS
2	Griddle	Captrate Solo Filter	5	20"	16"	93% See Filter Spec.	2	L55 Series E26	NO							NO	511 LBS

HOOD OPTIONS

HOOD NO.	TAG	OPTION
1	Fryer	FIELD WRAPPER 18.00" High Front, Left, Right
		BACKSPLASH 128.00" High X 130.00" Long 430 SS Vertical
		RIGHT QUARTER END PANEL 23" Top Width, 0" Bottom Width, 23" High 430 SS
		LEFT QUARTER END PANEL 23" Top Width, 0" Bottom Width, 23" High 430 SS
2	Griddle	FIELD WRAPPER 18.00" High Front, Left, Right
		BACKSPLASH 128.00" High X 120.00" Long 430 SS Vertical
		LEFT QUARTER END PANEL 23" Top Width, 0" Bottom Width, 23" High 430 SS
		RIGHT QUARTER END PANEL 23" Top Width, 0" Bottom Width, 23" High 430 SS

PERFORATED SUPPLY PLENUM(S)

HOOD NO.	TAG	POS.	LENGTH	WIDTH	HEIGHT	TYPE	RISER(S) WIDTH	LENG.	DIA.	CFM	S.P.
1	Fryer	Front	94"	14"	6"	MUA	12"	28"		666	0.169"
						MUA	12"	28"		666	0.169"
2	Griddle	Left	54"	14"	6"	MUA	12"	28"		724	0.170"
		Right	54"	14"	6"	MUA	12"	28"		724	0.170"

MECHANICAL AIR BALANCE	
TOTAL HOOD EXHAUST	3212 CFM
TOTAL HOOD MUA	2780 CFM
TOTAL DIFFUSER MUA	0 CFM
REMAINDER FROM HVAC	432 CFM

Captive Aire Systems Arizona
Contact Kelly Ryan
1717 E. Bell Rd. Ste 12 Phoenix, AZ 85022
PHONE: (480) 926-6810, (855) 926-6810
FAX: (480) 926-6811

VERIFY CEILING HEIGHT
____' ____"
Height required to verify that the hood will fit and to size the enclosure panels

SPECIFICATION: CAPTRATE GREASE-STOP SOLO FILTER

THE CAPTRATE GREASE-STOP SOLO FILTER IS A SINGLE-STAGE FILTER FEATURING A UNIQUE S-BAFFLE DESIGN IN CONJUNCTION WITH A SLOTTED REAR BAFFLE DESIGN, TO DELIVER EXCEPTIONAL FILTRATION EFFICIENCY.

FILTER IS STAINLESS STEEL CONSTRUCTION, AND SIZED TO FIT INTO STANDARD 2-INCH DEEP HOOD CHANNEL(S).

UNITS SHALL INCLUDE STAINLESS STEEL HANDLES AND A FASTENING DEVICE TO SECURE THE TWO COMPONENTS WHEN ASSEMBLED.

GREASE EXTRACTION EFFICIENCY PERFORMANCE SHALL REMOVE AT LEAST 75% OF GREASE PARTICLES FIVE MICRONS IN SIZE, AND 90% GREASE PARTICLES SEVEN MICRONS IN SIZE AND LARGER, WITH A CORRESPONDING PRESSURE DROP NOT TO EXCEED 1.0 INCHES OF WATER GAUGE.

THE CAPTRATE GREASE-STOP SOLO WAS TESTED TO ASTM STANDARD ASTM F2519-05.

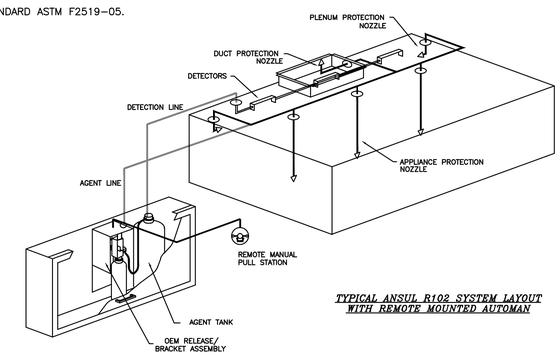

TYPICAL ANSUL R102 SYSTEM LAYOUT WITH REMOTE MOUNTED AUTOMAN

ACTUAL FIRE SYSTEM PIPING SCHEMATIC TO BE PROVIDED BY CONTRACTED FIRE SYSTEM DISTRIBUTOR AT TIME OF PERMITTING

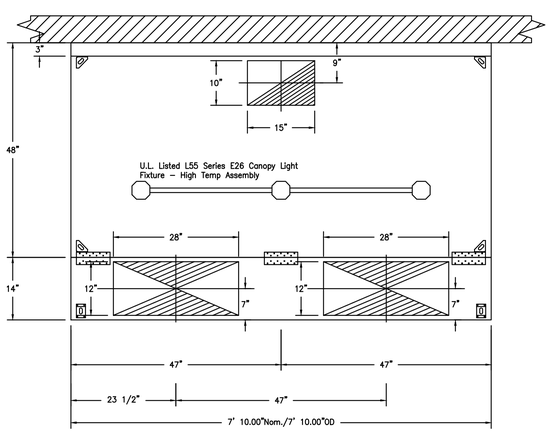

PLAN VIEW - Hood #1 (Fryer)
7' 10.00" LONG 4830ND-2-PSP-F

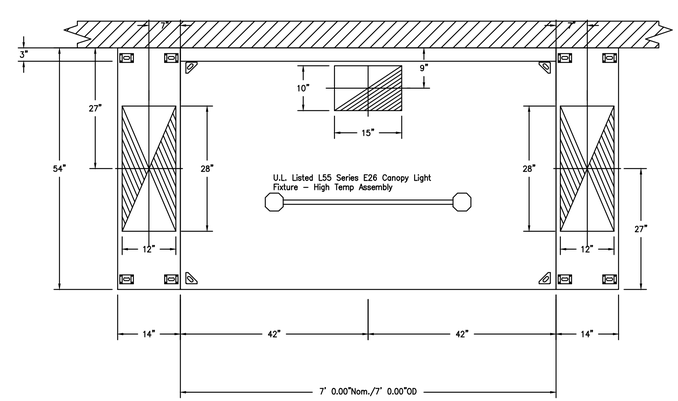

PLAN VIEW - Hood #2 (Griddle)
7' 0.00" LONG 5430ND-2-PSP-SS

1/2" DIA. ALL THREAD ROD CONNECTED TO ROOF JOIST THROUGH ANOTHER HANGING ANGLE

1/2" DIA. HEAVY DUTY NUT ONE ABOVE AND ONE BELOW HANGING ANGLE

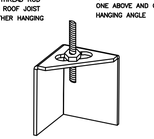

*ROD AND NUTS TO BE SUPPLIED BY INSTALLING CONTRACTOR
HANGING ANGLE IS PRE-PUNCHED AT FACTORY

ND-2 HANGING ANGLE DETAIL

HOOD STYLE	DIM FROM REAR	DIM FROM FRONT (24"H)	DIM FROM FRONT (30"H)
CANOPY ND2	4.166"	2.246"	2.246"
ND2-PSP-F	4.166"	2.246"	2.246"
BACKSHELF 2847BD	2.00"	14.25"	–
VHB/VHB-G	36"X36"	42"X42"	48"X48"
FRONT/BACK DIMS BY SIZE	2.246"	2.246"	2.246"

HANGING ANGLE LOCATIONS

EXHAUST CFM=LENGTH OF HOOD X CFM/LIN.FT. (LOAD)

SUPPLY CFM=EXHAUST CFM X PERCENTAGE REQUIRED

TOTAL DUCT AREA=144 X $\frac{\text{CFM}}{\text{FPM}(*)}$

DUCT LENGTH= $\frac{\text{TOTAL DUCT AREA}}{\text{DUCT DEPTH}}$

* CAPTIVE-AIRE VENTILATOR DUCT SIZES ARE CALCULATED USING AN EXHAUST VELOCITY OF 1500-1800 FPM AND A SUPPLY VELOCITY OF 1000 FPM.

CALCULATIONS UTILIZED

CAPTIVE-AIRE HOODS ARE BUILT IN COMPLIANCE WITH:

LISTED #3054804-001 & #3054804-002 — STANDARD 710 — intertek — BUILT IN ACCORDANCE WITH NFPA No. 96

Listed under ETL File number 3054804-001/002

BUILDING CODES

CAPTIVE-AIRE HOODS HAVE OPTIONAL CLEARANCE REDUCTION SYSTEMS AVAILABLE AS FOLLOWS:

MATERIAL	CLEARANCE REDUCTION SYSTEM
NON-COMBUSTIBLE	NONE REQUIRED
LIMITED-COMBUSTIBLE	3" UNINSULATED STANDOFF
COMBUSTIBLE	1" INSULATED STANDOFF

CLEARANCE TO COMBUSTIBLES

INSTALLATION

1. ALL ELECTRICAL "FIELD" CONNECTIONS AND RELATED INTERCONNECTIONS BY ELECTRICAL CONTRACTORS.
2. ALL PLUMBING "FIELD" CONNECTIONS AND RELATED INTERCONNECTIONS BY PLUMBING CONTRACTORS.
3. HANGING BRACKETS LOCATED AND WELDED AS SHOWN ON PLANS. ALL OTHER HANGER MATERIALS PROVIDED BY INSTALLING CONTRACTORS.
4. ALL CONNECTIONS FROM CAPTIVE-AIRE DUCT PER MECHANICAL CONTRACTORS'S PLANS.
5. COOKING EQUIPMENT TO SHUTOFF IN EVENT OF FIRE.
6. EXHAUST FANS TO TURN ON IN EVENT OF FIRE.
7. ALL LIGHTS FIXTURE SHOWN INSTALLED BY CAPTIVE-AIRE ARE FACTORY PREWIRED. INTERCONNECTIONS BETWEEN HOODS AND TO SWITCHES BY ELECTRICAL CONTRACTORS.
8. LAMPS FOR LIGHT FIXTURES BY INSTALLING CONTRACTORS.
9. SEISMIC RESTAINTS ARE RESPONSIBILITY OF INSTALLING CONTRACTOR.
10. INSTALLING CONTRACTORS ASSUME ALL RELATED REPONSIBILITY FOR VERIFICATION OF DIMENSIONAL DATA CONTAINED ON THESE DOCUMENTS FOR ACCURACY, INTEGRATION, AND ADMINISTRATION OF CODE REQUIREMENTS IN EFFECT PRIOR TO ANY RELEASE FOR PRODUCTION OF EQUIPMENT SHOWN.

BALANCE

11. KITCHEN HOODS MUST BE BALANCED WITH KITCHEN.
12. KITCHEN SHALL BE NEGATIVE WITH RESPECT TO DINING AREA.
13. RESTAURANT SHALL BE POSITIVE WITH RESPECT TO AMBIENT PRESSURE.

ADDITIONAL

14. WRITTEN HOOD DIMENSIONS HAVE PRECEDENCE OVER SCALE.
15. SIGNED AND "APPROVED" COPIES OF THIS DOCUMENT MUST BE RECEIVED BY THE FACTORY PRIOR TO COMMENCEMENT OF FABRICATION.

GENERAL NOTES

FILTER COLLECTION EFFICIENCY

2" Captrate Grease Stop Solo Filter

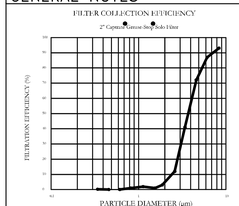

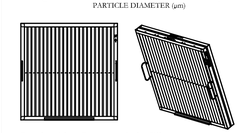

CaptiveAire Captrate Solo Filter
ETL Listed Grease Extracting Filters
Made From 430 Stainless Steel

FILTER DETAIL

REVISIONS

DESCRIPTION	DATE:

CAPTIVEAIRE
www.captiveaire.com
Arizona Office
1717 E. Bell Road, SUITE 12, Phoenix, AZ, 85022 PHONE: (480) 926-6810 FAX: (877) 719-2227 EMAIL: rep93@captiveaire.com

Great Steak Surf City Squeeze - Richmond, Va
RICHMOND, VA, 23226

DATE: 8/10/2016
DWG.#: 2741856
DRAWN BY:
SCALE: 3/4" = 1'-0"
MASTER DRAWING
SHEET NO. 1

bnp
bar napkin productions
2828 n central avenue
suite 1300
phoenix, az 85004
602 . 492 . 9494
www.bnp-llc.com

COMMONWEALTH OF VIRGINIA — MICHAEL M. NAKHLA No. 043706 — PROFESSIONAL ENGINEER

Tue Aug 16 2016 11:52:41

SURF CITY SQUEEZE SMOOTHIES

GREAT STEAK SURF CITY SQUEEZE

STORE 7621 1946

PROJECT LOCATION
11800 WEST BROAD ST.
SUITE 2116
RICHMOND, VA 23233

ISSUE DATE	
CITY SUBMITTAL	07.29.16

CAPTIVEAIRE SHEET
BN1309
M-3

FRANCHISEE: _____ _____
SIGNATURE DATE
AD: _____ _____
SIGNATURE DATE

Design Management Solutions LLC

THESE DRAWINGS AND ASSOCIATED DOCUMENTATION CONTAIN INFORMATION, DESIGNS, CONCEPTS, AND DATA THAT ARE THE SOLE PROPERTY OF DESIGN MANAGEMENT SOLUTIONS LLC. THIS DOCUMENT MUST NOT BE USED FOR ANY PURPOSE OTHER THAN ORIGINALLY INTENDED WITHOUT THE EXPRESSED WRITTEN CONSENT AND PERMISSION OF THE ENGINEER AND DESIGN MANAGEMENT SOLUTIONS LLC.

DMS#E0525 016-164
DFT: RSM
DSN: RSM
CHK: GL

© THIS DRAWING IS AN INSTRUMENT OF SERVICE AND THE PROPERTY OF CAPTIVEAIRE. THE DRAWING MAY NOT BE REPRODUCED OR UTILIZED IN ANY MANNER WITHOUT THE WRITTEN PERMISSION.

5/16/2016 10:46:06 AM - C:\Backup_Dropbox\DMS Dropbox Projects\016-164 Surf City Squeeze\GREAT STEAK Virginia\DMS\Dsk\016-164 Surf City Squeeze And Steakhouse M-Mvg - Sam

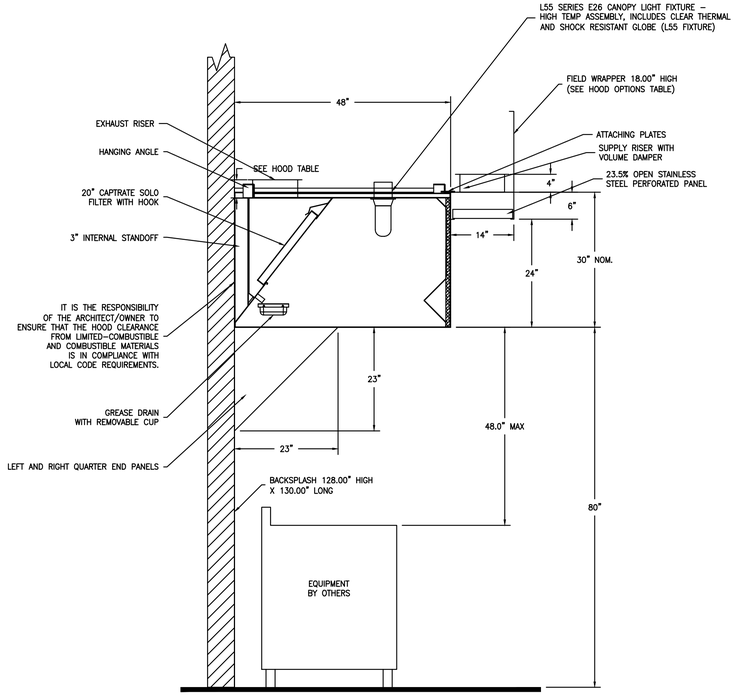

SECTION VIEW – MODEL 4830ND–2–PSP–F
HOOD – #1 (Fryer)

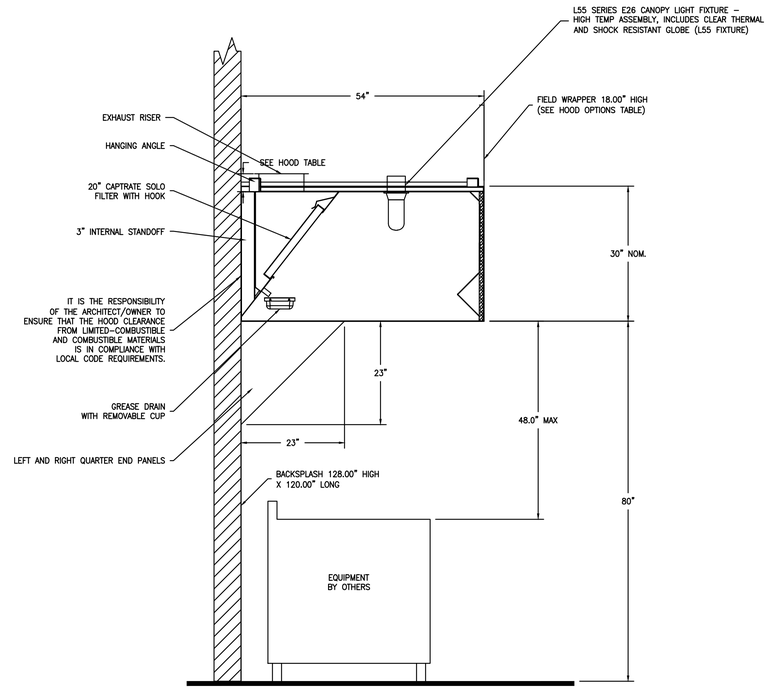

SECTION VIEW – MODEL 5430ND–2–PSP–SS
HOOD – #2 (Griddle)

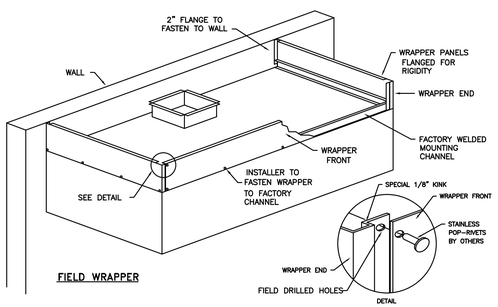

FIELD WRAPPER

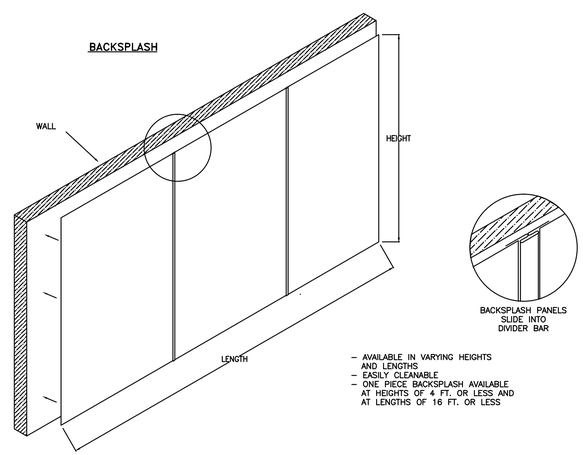

– AVAILABLE IN VARYING HEIGHTS AND LENGTHS
– EASILY CLEANABLE
– ONE PIECE BACKSPLASH AVAILABLE AT HEIGHTS OF 4 FT. OR LESS AND AT LENGTHS OF 16 FT. OR LESS

FRANCHISEE: _____ _____
SIGNATURE DATE

AD: _____ _____
SIGNATURE DATE

REVISIONS

DESCRIPTION	DATE:

CAPTIVEAIRE
www.captiveaire.com
Arizona Office
1717 E. Bell Road, SUITE 12, Phoenix, AZ, 85022 PHONE: (480) 926-6810 FAX: (877) 719-2227 EMAIL: reg93@captiveaire.com

Great Steak Surf City Squeeze – Richmond, Va
RICHMOND, VA, 23226

DATE: 8/10/2016
DWG.#: 2741856
DRAWN BY:
SCALE: 3/4" = 1'–0"
MASTER DRAWING
SHEET NO. 2

© THIS DRAWING IS AN INSTRUMENT OF SERVICE AND THE PROPERTY OF DMS NATIONALLC. THE DRAWING MAY NOT BE REPRODUCED OR UTILIZED IN ANY MANNER WITHOUT THEIR WRITTEN PERMISSION.

Design Management Solutions LLC

THESE DRAWINGS AND ASSOCIATED DOCUMENTATION CONTAIN INFORMATION, DESIGNS, CONCEPTS, AND DATA THAT ARE THE PROPERTY OF DESIGN MANAGEMENT SOLUTIONS LLC. THIS INFORMATION MAY NOT BE USED FOR ANY PURPOSE OTHER THAN ORIGINALLY INTENDED WITHOUT THE EXPRESSED WRITTEN CONSENT AND PERMISSION OF THE ENGINEER AND DESIGN MANAGMENT SOLUTIONS LLC.

DMS#E0525 016–164
DFT: RSM
DSN:RSM
CHK:GL

bnp
bar napkin productions

2828 n central avenue
suite 1300
phoenix, az 85004
602 . 492 . 9494
www.bnp-llc.com

COMMONWEALTH OF VIRGINIA
MICHAEL M. NAKHLA
No. 043706
PROFESSIONAL ENGINEER

Tue Aug 16 2016 11:52:09

SURF CITY SQUEEZE SMOOTHIES

GREAT STEAK SURF CITY SQUEEZE

STORE 7621 1946

PROJECT LOCATION
11800 WEST BROAD ST.
SUITE 2116
RICHMOND, VA 23233

ISSUE DATE	
CITY SUBMITTAL	07.29.16

CAPTIVEAIRE SHEET
BN1309
M-4

8/16/2016 10:45:06 AM - C:\Backup_Dropbox\DMS Dropbox\Projects\016-164 Surf City Squeeze GREAT STEAK Virginia\CAD\DMS CDs\016-164 Surf City Squeeze And Steakhouse - M.dwg - Sam

EXHAUST FAN INFORMATION – Job#2741856

FAN UNIT NO.	TAG	FAN UNIT MODEL #	CFM	ESP.	RPM	H.P.	B.H.P.	ø	VOLT	FLA	WEIGHT (LBS.)	SONES
1	EF–1	NCA24HPFA	3212	1.350	886	1.500	1.2290	3	208	4.6	221	15.8

MUA FAN INFORMATION – Job#2741856

FAN UNIT NO.	TAG	FAN UNIT MODEL #	BLOWER	HOUSING	CFM	ESP.	RPM	H.P.	B.H.P.	ø	VOLT	FLA	WEIGHT (LBS.)	SONES	BURNER EFFICIENCY(%)
2	MUA–1	A2–D.250–G15	G15–PB	A2–D.250	2780	0.500	759	1.500	1.0190	3	208	4.6	777	11	92

GAS FIRED MAKE–UP AIR UNIT(S)

FAN UNIT NO.	TAG	INPUT BTUs	OUTPUT BTUs	TEMP. RISE	REQUIRED INPUT GAS PRESSURE	GAS TYPE
2	MUA–1	195809	180144	60 deg F	7 in. w.c. – 14 in. w.c.	Natural

FAN OPTIONS

FAN UNIT NO.	TAG	OPTION (Qty. – Descr.)
1	EF–1	1 – Grease Box
		1 – Fan Base Ceramic Seal – For Grease Ducts
2	MUA–1	1 – AC Interlock Relay – 24VAC Coil
		1 – Motorized Backdraft Damper for A2–D Housing
		1 – Low Fire Start
		1 – Inlet Pressure Gauge, 0–35"
		1 – Manifold Pressure Gauge, –5 to 15" wc

FAN ACCESSORIES

FAN UNIT NO.	TAG	EXHAUST			SUPPLY			
		GREASE CUP	GRAVITY DAMPER	WALL MOUNT	SIDE DISCHARGE	GRAVITY DAMPER	MOTORIZED DAMPER	WALL MOUNT
1	EF–1	YES						
2	MUA–1						YES	

CURB ASSEMBLIES

NO.	ON FAN	WEIGHT	ITEM	SIZE
1	# 1	48 LBS	Curb	31.500"W x 31.500"L x 20.000"H Vented Hinged
2	# 2	76 LBS	Curb	31.000"W x 79.000"L x 20.000"H Insulated

HINGE KIT INSTALLATION

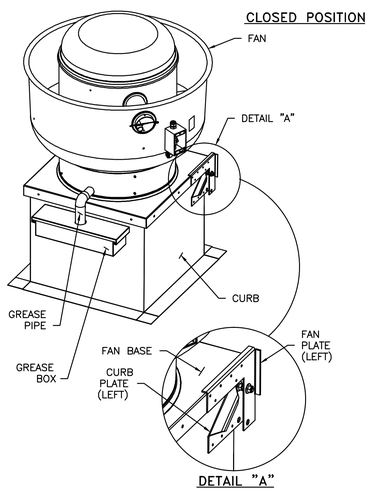

FRANCHISEE: _____ _____

SIGNATURE DATE

AD: _____ _____

SIGNATURE DATE

FAN #1 NCA24HPFA – EXHAUST FAN (EF–1)

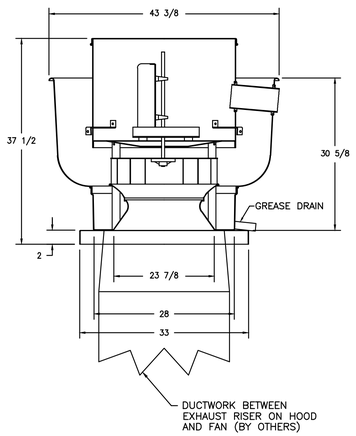

FEATURES:

- ROOF MOUNTED FANS
- RESTAURANT MODEL
- UL705 AND UL762
- AMCA SOUND AND AIR CERTIFIED
- WIRING FROM MOTOR TO DISCONNECT SWITCH
- WEATHERPROOF DISCONNECT
- HIGH HEAT OPERATION 300°F (149°C)
- GREASE CLASSIFICATION TESTING

NORMAL TEMPERATURE TEST
EXHAUST FAN MUST OPERATE CONTINUOUSLY WHILE EXHAUSTING AIR AT 300°F (149°C) UNTIL ALL FAN PARTS HAVE REACHED THERMAL EQUILIBRIUM, AND WITHOUT ANY DETERIORATING EFFECTS TO THE FAN WHICH WOULD CAUSE UNSAFE OPERATION.

ABNORMAL FLARE–UP TEST
EXHAUST FAN MUST OPERATE CONTINUOUSLY WHILE EXHAUSTING BURNING GREASE VAPORS AT 600°F (316°C) FOR A PERIOD OF 15 MINUTES WITHOUT THE FAN BECOMING DAMAGED TO ANY EXTENT THAT COULD CAUSE AN UNSAFE CONDITION.

OPTIONS

GREASE BOX
FAN BASE CERAMIC SEAL – FOR GREASE DUCTS

VERIFY PITCH CURB

_____ : _____

Curb Pitch Required in order to manufacture the curb to specification.

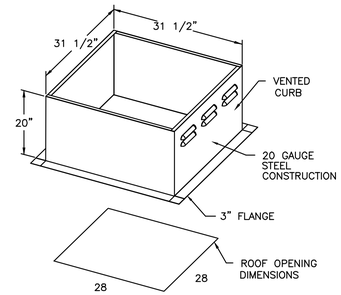

PITCHED CURBS ARE AVAILABLE FOR PITCHED ROOFS.

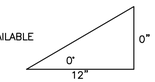

SPECIFY PITCH:
EXAMPLE: 7/12 PITCH = 30° SLOPE

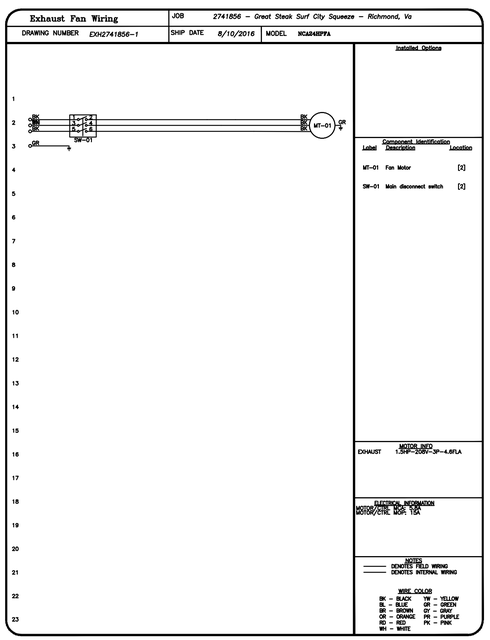

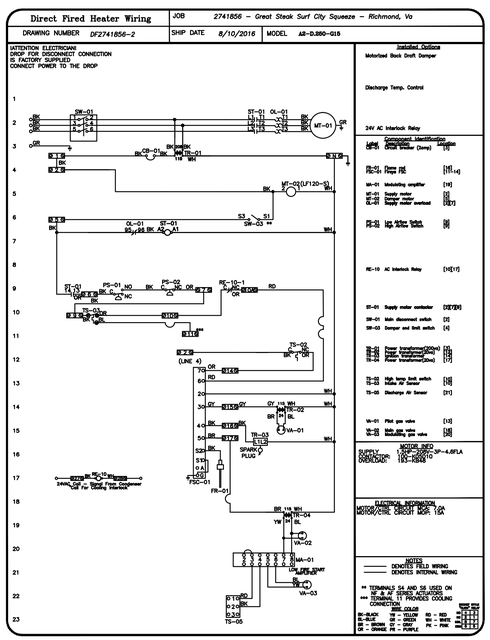

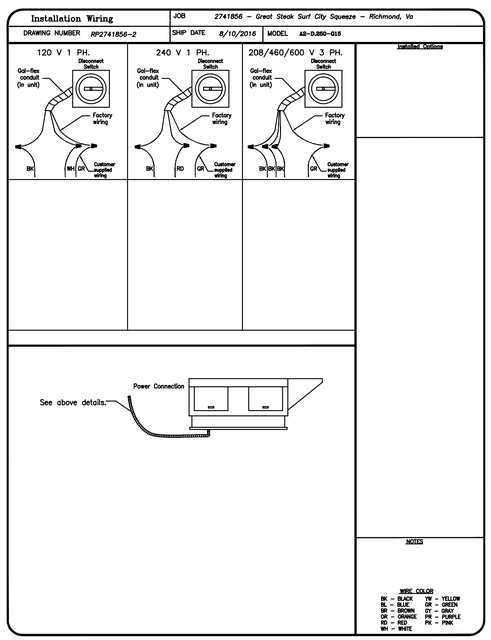

Design Management Solutions LLC

THESE DRAWINGS AND ASSOCIATED DOCUMENTATION CONTAIN INFORMATION, DATA, CONCEPTS, AND IDEAS THAT ARE THE SOLE PROPERTY OF DESIGN MANAGEMENT SOLUTIONS LLC. THIS INFORMATION MAY NOT BE USED FOR ANY PURPOSE OTHER THAN THOSE SPECIFICALLY ALLOWED IN THE CONTRACT WITHOUT CONSENT AND EXPRESSION OF THE ENGINEER AND DESIGN MANAGEMENT SOLUTIONS LLC.

DMS#E0525 016–164
DFT: RSM
DSN:RSM
CHK:GL

REVISIONS

DESCRIPTION	DATE:

CAPTIVEAIRE
www.captiveaire.com
Arizona Office
1717 E. Bell Road, SUITE 12, Phoenix, AZ. 85022 PHONE: (480) 926-6810 FAX: (877) 719-2227 EMAIL: reg33@captiveaire.com

Great Steak Surf City Squeeze – Richmond, Va
RICHMOND, VA, 23226

DATE: 8/10/2016

DWG.#: 2741856

DRAWN BY:

SCALE: 3/4" = 1'–0"

MASTER DRAWING

SHEET NO. 3

© THIS DRAWING IS AN INSTRUMENT OF SERVICE AND THE PROPERTY OF BAR NAPKIN LLC. THIS DRAWING MAY NOT BE REPRODUCED OR UTILIZED IN ANY MANNER WITHOUT THEIR WRITTEN PERMISSION.

bar napkin productions
2828 n central avenue
suite 1300
phoenix, az 85004
602 . 492 . 9494
www.bnp-llc.com

COMMONWEALTH OF VIRGINIA
MICHAEL M. NAKHLA
No. 043706
PROFESSIONAL ENGINEER

Tue Aug 16 2016 11:51:37

GREAT STEAK SURF CITY SQUEEZE

STORE 7621 1946

PROJECT LOCATION

11800 WEST BROAD ST.
SUITE 2116
RICHMOND, VA 23233

ISSUE DATE	
CITY SUBMITTAL	07.29.16

CAPTIVEAIRE SHEET

BN1309

M-5

8/16/2016 10:46:05 AM - C:\ Backup\ Dropbox\ DMS Dropbox Projects\ G16-164 Surf City Squeeze GREAT STEAK Virginia\ DMS CDs\ G16-164 Surf City Squeeze And Steakhouse - Mixing - Sam

FAN #2 A2-D.250-G15 - HEATER (MUA-1)
1. DIRECT GAS FIRED HEATED MAKE UP AIR UNIT WITH 15" BLOWER
2. INTAKE HOOD WITH EZ FILTERS
3. DOWN DISCHARGE - AIR FLOW RIGHT -> LEFT
4. COOLING INTERLOCK RELAY. 24VAC COIL. 120V CONTACTS. LOCKS OUT BURNER CIRCUIT WHEN AC IS ENERGIZED.
5. MOTORIZED BACK DRAFT DAMPER 22.75" X 24" FOR SIZE 2 STANDARD & MODULAR DIRECT FIRED HEATERS W/EXTENDED SHAFT, STANDARD GALVANIZED CONSTRUCTION, 3/4" REAR FLANGE, LF120S ACTUATOR INCLUDED
6. LOW FIRE START. ALLOWS THE BURNER CIRCUIT TO ENERGIZE WHEN THE MODULATION CONTROL IS IN A LOW FIRE POSITION.
7. GAS PRESSURE GAUGE, 0-35", 2.5" DIAMETER, 1/4" THREAD SIZE
8. GAS PRESSURE GAUGE, -5 TO +15 INCHES WC., 2.5" DIAMETER, 1/4" THREAD SIZE

SUPPLY SIDE HEATER INFORMATION:

WINTER TEMPERATURE = 18°F. TEMP. RISE = 60°F.
BTUs CALCULATED OFF STANDARD AIR DENSITY
OUTPUT BTUs AT ALTITUDE OF 0.0 ft. = 180144
INPUT BTUs AT ALTITUDE OF 0.0 ft. = 195809

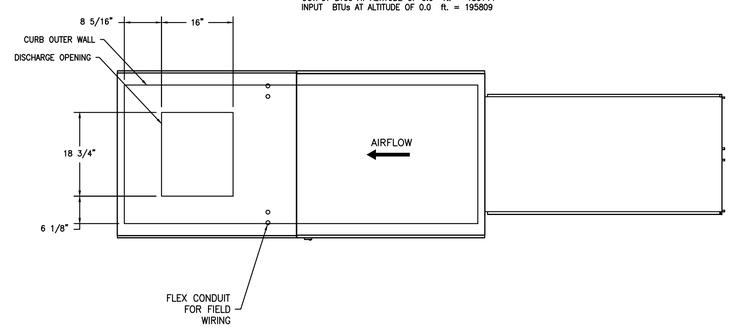

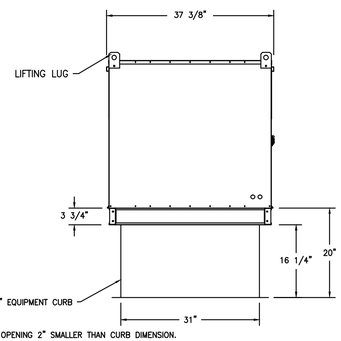

ROOF OPENING 2" SMALLER THAN CURB DIMENSION.

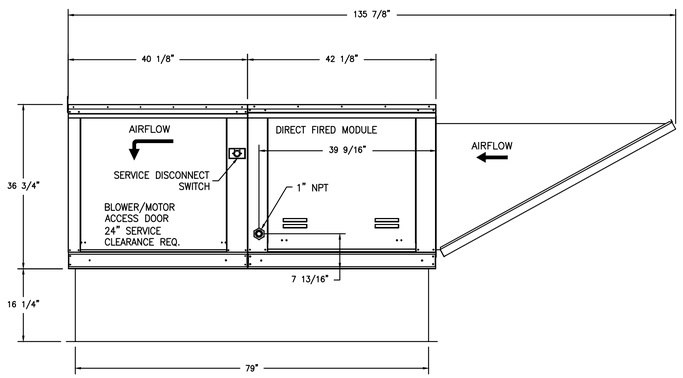

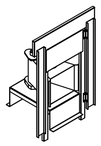

Direct Fired (DF) Profile Plate Assembly

Direct Fired Profile Plate Specifications:

Description:
Direct fired burners shall have patented (US Patent No.: US6620523B2), self-adjusting profile plates designed to ensure proper air velocity and pressure drop across the burner. Profile plates shall allow burners to achieve clean combustion by limiting by-product levels to a maximum of 5ppm of carbon monoxide (CO), and 0.5ppm of nitrogen dioxide (NO2).

Application:
Spring-loaded burner profile plates are engineered to automatically react to the momentum of a fresh air stream, without the need for any motors or actuators to mechanically adjust them. With this feature, all DF units are designed for demand control ventilation (DCV) requirements.

Certifications:
All profile plate assemblies shall be included in the DF unit's ETL listing and comply with combined safety standards ANSI Z83.4 and CSA 3.7 (non-recirculating DF heaters) and ANSI Z83.18 (recirculating DF heaters).

General Construction:
-Profile plates shall be formed from G90 galvanized steel.
-Profile plates shall vary in size per unit.
-Profile plates shall be mounted along the same plane as the discharge of the burner.
-Design shall incorporate properly torqued, permanently mounted spring hinges.
-Spring hinges shall be made from plated steel.

FRANCHISEE: _____ SIGNATURE _____ DATE

AD: _____ SIGNATURE _____ DATE

REVISIONS

DESCRIPTION	DATE:

CAPTIVEAIRE
www.captiveaire.com
Arizona Office
1717 E. Bell Road, SUITE 12, Phoenix, AZ. 85022 PHONE: (480) 926-6810 FAX: (877) 719-2227 EMAIL: reg93@captiveaire.com

Great Steak Surf City Squeeze - Richmond, Va
RICHMOND, VA, 23226

DATE: 8/10/2016

DWG.#: 2741856

DRAWN BY:

SCALE: 3/4" = 1'-0"

MASTER DRAWING

SHEET NO. 4

bnp
bar napkin productions
2828 n central avenue
suite 1300
phoenix, az 85004
602 . 492 . 9494
www.bnp-llc.com

COMMONWEALTH OF VIRGINIA
MICHAEL M. NAKHLA
No. 043706
PROFESSIONAL ENGINEER
Tue Aug 16 2016 11:51:06

SURF CITY SQUEEZE SMOOTHIES

GREAT STEAK SURF CITY SQUEEZE

STORE 7621 1946

PROJECT LOCATION
11800 WEST BROAD ST.
SUITE 2116
RICHMOND, VA 23233

	ISSUE DATE
CITY SUBMITTAL	07.29.16

CAPTIVEAIRE SHEET
BN1309

M-6

Design Management Solutions LLC

THESE DRAWINGS AND ASSOCIATED DOCUMENTATION CONTAIN INFORMATION, DESIGNS, CONCEPTS, AND DATA THAT ARE THE SOLE PROPERTY OF DESIGN MANAGEMENT SOLUTIONS LLC. THIS INFORMATION MAY NOT BE USED FOR ANY PURPOSE OTHER THAN ORIGINALLY INTENDED WITHOUT THE EXPRESSED WRITTEN CONSENT AND PERMISSION OF THE ENGINEER AND DESIGN MANAGEMENT SOLUTIONS LLC.

DMS#E0525 016-164
DFT: RSM
DSN: RSM
CHK: GL

© THIS DRAWING IS AN INSTRUMENT OF SERVICE AND THE PROPERTY OF BNP WHALLEY. THE DRAWING MAY NOT BE REPRODUCED OR USED IN ANY MANNER WITHOUT THEIR WRITTEN PERMISSION.

07/12/2016 10:46:06 AM - C:\Backup Dropbox\Dropbox Projects\2016-164 Surf City Squeeze\GREAT STEAK Virginia\DMS\Dds\2016-164 Surf City Squeeze And Steakhouse - M.dwg - Sam

ELECTRICAL PACKAGES – Job#2741856

NO.	TAG	PACKAGE #	LOCATION	SWITCHES		OPTION	FANS CONTROLLED					
				LOCATION	QUANTITY		FAN TAG	TYPE	ϕ	H.P.	VOLT	FLA
1		SC-311110FP	Wall Mount In SS Box	SS Wall Mount Box	1 Light 1 Fan	Smart Controls Thermostatic Control	EF-1	Exhaust	3	1.500	208	4.6
							MUA-1	Supply	3	1.500	208	4.6

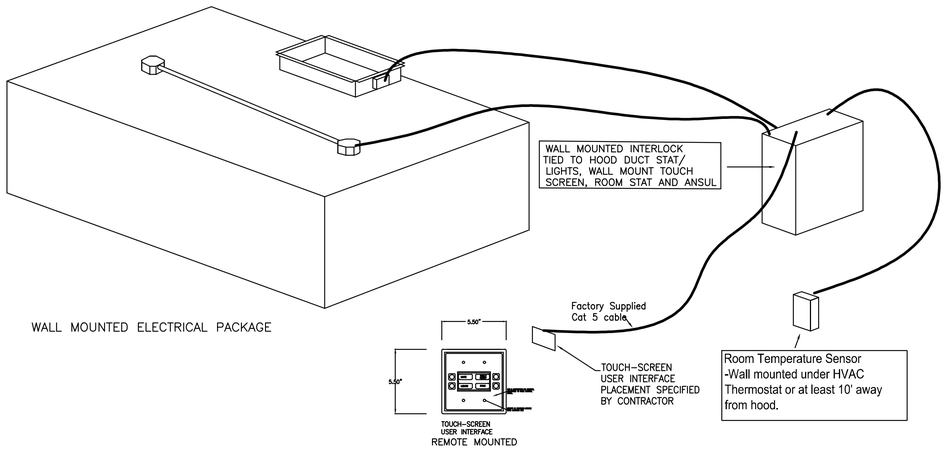

WALL MOUNTED ELECTRICAL PACKAGE

ELECTRICIAN NOTES :

All Hood/Fan/EMS/UDS/PCU electrical connections and interconnections to be provided and installed by Electrician. Electrician to provide, install, and land wiring between hood lights, hood temp sensors, remote Ansul system microswitches, and any other component requiring an electrical connection to the Captive-Aire electrical package. Failure by the Electrician to make ALL required electrical connections and interconnections will result in the electrical controls not working properly. Any loss or failed test as a result of electrical controls not working properly is the responsibility of the Electrician.
Light bulbs for kitchen hoods to be provided and installed by electrician.

STANDARD CONTROL PANEL
DUCT STAT DETAIL

Factory installed temperature sensors, sends signal to the control panel for automatic fan operation. One temerature sensor per exhaust riser.

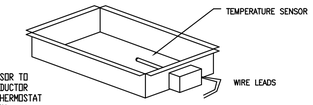

NOTE:
WIRE TEMPERATURE SENSOR TO EMS PANEL WITH 2 CONDUCTOR 18AWG PLENUM RATED THERMOSTAT WIRE. WIRE PROVIDED BY CAPTIVEAIRE. REFER TO CONTROL PANEL SHEET FOR CONNECTIONS.

Room Override Thermostat

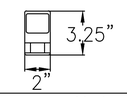

Provides room override based on temperature differential between the room and duct. Install on a wall in space but not directly under the hood or close to an appliance so the reading is accurate for space.

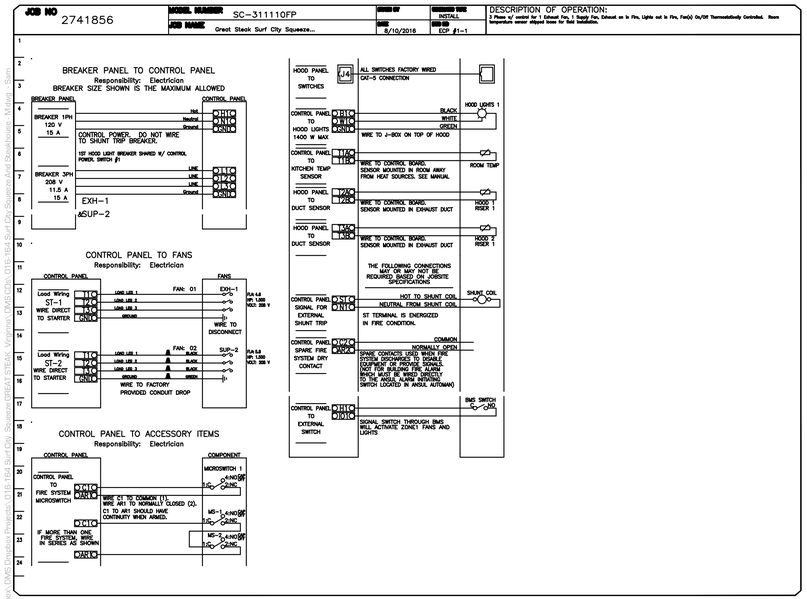

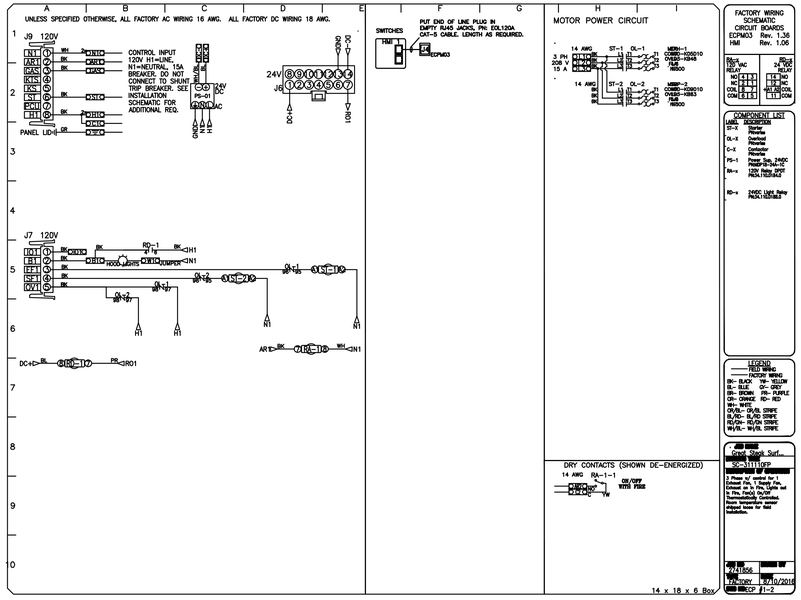

FRANCHISEE: _____ _____
SIGNATURE DATE

AD: _____ _____
SIGNATURE DATE

Design Management Solutions LLC

THESE DRAWINGS AND ASSOCIATED DOCUMENTATION CONTAIN INFORMATION, DESIGNS, CONCEPTS, AND DATA THAT IS THE PROPERTY OF DESIGN MANAGEMENT SOLUTIONS LLC. THIS INFORMATION MAY NOT BE USED FOR ANY PURPOSE OTHER THAN ORIGINALLY INTENDED WITHOUT THE EXPRESSED WRITTEN CONSENT AND PERMISSION OF THE ENGINEER AND DESIGN MANAGEMENT SOLUTIONS LLC.

DMS#E0525 016-164
DFT: RSM
DSN: RSM
CHK: GL

REVISIONS

	DESCRIPTION	DAT
△		
△		
△		
△		

CAPTIVEAIRE
www.captiveaire.com
Arizona Office

Great Steak Surf City Squeeze – Richmond, Va
RICHMOND, VA, 23226

DATE: 8/10/2016
DWG.#: 2741856
DRAWN BY:
SCALE: 3/4" = 1'-0"
MASTER DRAWING
SHEET NO. 5

© THIS DRAWING IS AN INSTRUMENT OF SERVICE AND THE PROPERTY OF B.N.P. PROJECTS, LLC. THIS DRAWING MAY NOT BE REPRODUCED OR UTILIZED IN ANY MANNER WITHOUT THEIR WRITTEN PERMISSION.

bnp
bar napkin productions
2828 n central avenue
suite 1300
phoenix, az 85004
602 . 492 . 9494
www.bnp-llc.com

COMMONWEALTH OF VIRGINIA
MICHAEL M. NAKHLA
No. 043706
PROFESSIONAL ENGINEER
Tue Aug 16 2016 11:50:36

SURF CITY SQUEEZE SMOOTHIES

GREAT STEAK SURF CITY SQUEEZE

STORE 7621 1946

PROJECT LOCATION
11800 WEST BROAD ST.
SUITE 2116
RICHMOND, VA 23233

ISSUE DATE	
CITY SUBMITTAL	07.29.16

CAPTIVEAIRE SHEET
BN1309
M-7

PLUMBING SPECIFICATION

SCOPE OF WORK: THE WORK INCLUDED UNDER THIS CONTRACT INCLUDES THE FURNISHING OF ALL LABOR, MATERIALS, TOOLS, TRANSPORTATION, SERVICES, PERMITS, INSPECTION FEES, ETC. REQUIRED IN THE COMPLETE INSTALLATION OF PLUMBING WORK AS SPECIFIED HEREIN AND SHOWN ON ACCOMPANYING DRAWINGS AND AS REQUIRED BY THE CONDITIONS AT THE SITE. THE GENERAL AND SPECIAL CONDITIONS ARE HEREBY MADE A PART OF THIS SECTION. IN ADDITION, WORK IN THESE SECTIONS ARE GOVERNED BY ALL PROVISIONS OF THE CONTRACT DOCUMENTS.

BEFORE SUBMITTING A BID EACH SUBCONTRACTOR SHALL CAREFULLY STUDY THE ARCHITECTURAL DRAWINGS AND SHALL MAKE A CAREFUL EXAMINATION OF THE PREMISES AND ANY EXISTING WORK. THE CONTRACTOR SHALL DETERMINE IN ADVANCE THE METHODS OF INSTALLING AND CONNECTING THE APPARATUS, THE MEANS TO BE PROVIDED FOR GETTING THE EQUIPMENT INTO THE SITE, AND SHALL BECOME THOROUGHLY FAMILIAR WITH ALL OF THE REQUIREMENTS OF HIS CONTRACT. BY SUBMITTING A PROPOSAL FOR THE WORK REQUIRED AND INCLUDED IN THE CONTRACT, THE CONTRACTOR SHALL BE DEEMED TO HAVE MADE SUCH STUDY AND EXAMINATION, AND TO BE FAMILIAR WITH AND ACCEPT ALL CONDITIONS OF THE SITE.

CODES, PERMITS, FEES, INSPECTIONS, RULES AND REGULATIONS:
THE CONTRACTOR MUST, AT HIS OWN EXPENSE, OBTAIN ALL NECESSARY PERMITS, PAY ALL LEGAL FEES AND CHARGES, INCLUDING WATER AND SEWER DEVELOPMENT FEES, AND COMPLY WITH ALL STATE AND MUNICIPAL BUILDING AND SAFETY LAWS, ORDINANCES AND REGULATIONS, RELATING TO BUILDING, PUBLIC HEALTH AND SAFETY. ALL WORK SHALL BE IN CONFORMANCE WITH THE GOVERNING CITY CODES.

INSTALLATION:
THE ENTIRE PLUMBING SYSTEM SHALL BE INSTALLED IN A NEAT, WORKMANLIKE, FINISHED AND SAFE MANNER. CONCEAL ALL PIPING IN FINISHED AREAS UNLESS NOTED OTHERWISE. ALL PIPING SHALL BE ADEQUATELY SUPPORTED AND INSTALLED PARALLEL WITH THE BUILDING WALLS. THE ENTIRE INSTALLATION SHALL BE SUBJECT TO THE ARCHITECT'S APPROVAL.

ELECTRICAL:
WIRING IS INCLUDED UNDER THE ELECTRICAL DIVISION OF THE SPECIFICATIONS. ALL EQUIPMENT, DEVICES AND WIRING SHALL CONFORM TO THE NATIONAL ELECTRIC CODE OR LOCAL JURISDICTION, WHICH EVER IS MORE STRINGENT. PROVIDE PLUMBING EQUIPMENT HAVING MOTORS WITH MOTOR PROTECTORS. WIRING AND PROPER OPERATION OF THE PLUMBING EQUIPMENT IS THE RESPONSIBILITY OF THE PLUMBING CONTRACTOR. ALL WIRING SHALL BE ROUTED IN CONDUIT OR IN PLENUM RATED WIRING. PROVIDE ONE (1) POWER CONNECTION POINT FOR ALL ELECTRICAL WIRING ON ALL EQUIPMENT.

EQUIPMENT LIST AND MAINTENANCE MANUAL:
MAINTENANCE MANUAL SHALL INCLUDE ALL AVAILABLE MANUFACTURERS' OPERATION AND MAINTENANCE INSTRUCTIONS, TOGETHER WITH THE RECORD DRAWINGS HEREIN BEFORE SPECIFIED, AND ALL OTHER DIAGRAMS AND INSTRUCTIONS NECESSARY TO PROPERLY OPERATE AND MAINTAIN THE EQUIPMENT. THE MANUAL SHALL ALSO INCLUDE THE NAME, ADDRESS, AND PHONE NUMBER OF THE GENERAL CONTRACTOR AND ALL SUBCONTRACTORS INVOLVED IN ANY OF THE WORK SPECIFIED HEREIN. THE EQUIPMENT LIST AND MAINTENANCE MANUAL SHALL BE SUBMITTED IN ACCORDANCE WITH THE ARCHITECTS SPECIFICATIONS.

WARRANTY:
THE SYSTEM SHALL HAVE A WARRANTY COVERING LABOR, MATERIALS AND EQUIPMENT FOR A PERIOD OF ONE YEAR AFTER COMPLETION AND ACCEPTANCE. REPLACE OR REPAIR ALL DEFECTIVE WORKMANSHIP, EQUIPMENT, AND MATERIALS AT NO ADDITIONAL COST TO THE OWNER.

FINAL TESTING:
BEFORE ACCEPTANCE AND FINAL PAYMENT, THE CONTRACTOR SHALL DEMONSTRATE THAT ALL APPARATUSES ARE FUNCTIONING PROPERLY AND EFFICIENTLY.

PRODUCTS:
ALL PRODUCTS SHALL BE NEW AND UNUSED OF ESTABLISHED AND REPUTABLE AMERICAN MANUFACTURERS. ITEMS OF EQUIPMENT USED FOR THE SAME PURPOSE SHALL BE OF THE SAME MANUFACTURER.

SYSTEMS SHALL BE COMPLETE AND OPERABLE. ANY ACCESSORIES REQUIRED FOR THE OPERATION OF THE SYSTEM, SHALL BE PROVIDED WHETHER OR NOT THEY ARE SPECIFICALLY INDICATED. SUCH ACCESSORIES WOULD INCLUDE FILTERS, CONDENSATE DRAINS, RELIEF VALVES, SERVICE VALVES, ETC.

SPECIFIC REFERENCE TO A MANUFACTURER'S PRODUCT IS ONLY TO ESTABLISH TYPE, QUALITY, AND PERFORMANCE REQUIRED. THESE QUALIFICATIONS ARE IN ADDITION TO THE REQUIREMENTS SHOWN ON THE DRAWINGS AND HEREIN THESE SPECIFICATIONS. LISTING OF ALTERNATE EQUIPMENT MANUFACTURERS SHALL NOT BE CONSTRUED AS AN UNCONDITIONAL APPROVAL OF THE PRODUCTS OF THOSE MANUFACTURERS.

SUBSTITUTIONS OF MATERIALS OR PRODUCTS SHOWN HEREIN SHALL BE AT THE OWNER'S, ARCHITECT'S, OR ENGINEER'S WRITTEN APPROVAL, ONLY WITH COPIES OF APPROVAL SENT TO THE PROJECT FILE. ANY ADDITIONAL COST RESULTING FROM THE USE OF SUBSTITUTED EQUIPMENT SHALL BE AT THE CONTRACTOR'S EXPENSE. ANY DEVIATION FROM THESE DRAWINGS WILL NOT BE ALLOWED WITHOUT PRIOR APPROVAL.

ALL EQUIPMENT SHALL BE LABELED WITH STEEL TAGS EMBOSSED WITH 1/4" HIGH LETTERS, PERMANENTLY ATTACHED. TAG SHALL CLEARLY INDICATE THE AREA SERVED BY THE EQUIPMENT.

RECORD DRAWINGS:
PROVIDE RECORD DRAWINGS WHICH SHALL CLEARLY SHOW ALL DIFFERENCES BETWEEN THE CONTRACT WORK AS DRAWN AND INSTALLED. PIPING MAINS BELOW SLAB AND/OR GRADE AND ALL BRANCH LINES BELOW SLAB OR GRADE, IN EXCESS OF 5 FEET IN LENGTH, SHALL BE DIMENSIONED FROM COLUMNS OF ANY PERMANENT STRUCTURE. ALSO, SHOW ALL WORK ADDED TO THE CONTRACT WHICH IS NOT SHOWN ON THE CONTRACT DOCUMENTS. RECORD DRAWINGS SHALL BE IN ACCORDANCE THE ARCHITECTS SPECIFICATIONS.

EXCAVATION AND BACKFILL:
CONTRACTOR SHALL PROVIDE BLUE STAKE AT ALL EXISTING UTILITIES. COMPLETE ALL EXCAVATION AND BACKFILL, AS NECESSARY, FOR THE INSTALLATION OF UNDERGROUND PIPING. COMPACT AND TAMP BACKFILL TO ORIGINAL GRADE IN ACCORDANCE WITH REQUIREMENTS, AS SPECIFIED BY ARCHITECT OR AND LOCAL CODE. REMOVE EXCESS DIRT AS DIRECTED. NO WORK SHALL BE COVERED UNTIL PROPERLY TESTED AND APPROVED. ALL PAVEMENT, SIDEWALK, PIPING, ELECTRICAL CONDUIT, ETC., CAUSED TO BE CUT OR DAMAGED BY THIS SECTION SHALL BE RESTORED TO ORIGINAL CONDITION BY WORKMEN QUALIFIED AND ACTIVE IN THE TRADES INVOLVED.

WATER PIPING:
ALL PIPING SHALL CONFORM TO THE REQUIREMENTS OF THE ANSI SAFETY CODE, BE FREE FROM ALL DEFECTS AND BE PROPERLY IDENTIFIED.

ABOVE GROUND: SHALL BE TYPE "L" HARD DRAWN COPPER TUBING CONFORMING TO ASTM B 88-72.

BELOW GROUND: (INSTALLED UNDER CONCRETE) TYPE "K" SOFT DRAWN COPPER TUBING, CONFORMING TO ASTM B 88-72, SPIRALLY WRAP PIPING BELOW GRADE OR FLOORS WITH 3 LAYERS OF 20 MIL POLYETHYLENE TAPE WITH 1/2 OVERLAP. INSTALL NO PIPING JOINTS BELOW FLOOR.

ALL COPPER TUBING SHALL UTILIZE SWEAT FITTINGS SOLDERED WITH ASTM B 32, ALLOY SN95, SN94, OR E, LEAD FREE SOLDER.

SOIL, WASTE, AND VENT PIPING:
CAST IRON: NO-HUB CAST IRON, CISPI 301-72T SPECIFICATION FOR ALL SOIL, WASTE AND VENT PIPING 2 INCHES AND LARGER WITH STANDARD WEIGHT FITTINGS. USE STAINLESS STEEL NO-HUB CAST IRON COUPLINGS THROUGHOUT THE PROJECT.

GALVANIZED IRON: SCHEDULE 40 STANDARD WEIGHT CONFORMING TO ASTM A72-68, FOR ALL VENT PIPING 1-1/2" AND SMALLER. USE WROUGHT IRON SCREWED FITTINGS TO MATCH PIPE. MAKE ALL SCREWED JOINTS WITH TEFLON TAPE.

ABS: ABS PIPING CONFORMING TO ASTM D2661-78 FOR ALL SOIL, WASTE AND VENT PIPING WITH MATCHING FITTINGS. ABS ABOVE AND BELOW GRADE FOR COMBUSTIBLE CONSTRUCTION OR ALLOWED BY LOCAL JURISDICTION. ABS FOR NON-COMBUSTIBLE CONSTRUCTION BELOW GRADE ONLY.

ALL SOIL AND WASTE PIPING 3" AND SMALLER SHALL SLOPE MINIMUM OF 1/4" PER FOOT, PIPING 4" AND LARGER SHALL SLOPE MIN. OF 1/8" PER FOOT.

CONDENSATE DRAIN PIPING:
INSTALL ALL PIPING ABOVE FLOOR UNLESS NOTED ON THE DRAWINGS. USE TYPE "M" HARD DRAWN COPPER FOR ALL CONDENSATE DRAIN LINES. USE WROUGHT COPPER SOLDER TYPE FITTINGS AT ALL COPPER CONNECTIONS. INSTALL PIPING WITH MINIMUM FALL OF 1/8" PER FOOT, FROM CONDENSATE PANS TO INDIRECT CONNECTIONS AT PLUMBING WASTE SYSTEM. PROVIDE TRAPS AT UNIT. MAKE CHANGES IN DIRECTION WITH TEES OR CROSSES. EQUIP THE EXTRA OPENING WITH THREADED BRASS PLUG FOR CLEANOUT ACCESS IN DIRECTION OF RUN, UNLESS THE CHANGE IN DIRECTION IS FROM HORIZONTAL TO VERTICAL. ON TEES INSTALLED VERTICALLY, LEAVE THE EXTRA OPENING OPEN FOR VENT PURPOSES, WITH AN EXTENSION AS REQUIRED TO RAISE OPENING ABOVE HYDRAULIC GRADE LINE. CLEAN PIPING AFTER INSTALLATION BY FLUSHING ENTIRE SYSTEM THOROUGHLY WITH CLEAN WATER.

INSULATE ALL PRIMARY CONDENSATE DRAIN PIPING INSTALLED IN NON-CONDITIONED SPACE, WITH 3/8" THICK FLEXIBLE FOAMED PLASTIC CLOSED CELL PIPE INSULATION. INSULATION SHALL HAVE A "K" FACTOR OF .26 AT 70°F, ASTM C-177-63 AND ASTM C355-64.

GAS PIPING: THE PLUMBING CONTRACTOR SHALL SEE THAT THE PROPER GAS METER AND REGULATOR ARE INSTALLED BY THE UTILITY CO., AND PAY FOR ANY FEES CHARGED FOR THE INSTALLATION OF THE METER AND SERVICE LINES. GAS LINES SHALL EXTEND FROM THE METER TO ALL EQUIPMENT REQUIRING GAS.

ABOVE GROUND: SCREWED STANDARD WEIGHT SCHEDULE 40 BLACK STEEL WITH WELDED FITTINGS, CONFORMING TO ASTM A53 SPECIFICATIONS FOR GAS PIPING.

BELOW GRADE: 23/2406 ORANGE POLYETHYLENE NATURAL GAS PIPE AND TUBING CONFORMING TO ASTM D2513. SOCKET FUSION FITTINGS CONFORMING TO ASTM D2683 AND BUTT FUSION FITTINGS CONFORMING TO ASTM D3261. GAS PIPING INSTALLED BELOW GRADE SHALL BE PLACED IN TRENCHING WHICH IS NOT LESS THAN 24" (PLUS THE OUTSIDE DIAMETER OF THE PIPE) BELOW FINISHED GRADE, AND SHALL HAVE BOTH A MINIMUM OF 6" AND A PROTECTIVE COVER OF 6", USING SAND OR MATERIAL OF EQUIVALENT GRIT SIZE FOR THIS PURPOSE. AN ADDITIONAL FILL OF SAND OR CLEAN SOIL SHALL BE PROVIDED TO ASSURE A MINIMUM TOTAL COVER OF 18". "SAND" SHALL BE DEFINED AS MATERIAL WHICH WILL PASS A NO. 4 SIEVE (APPROXIMATELY 3/16") AND WHICH WILL ASSURE A NATURAL COMPACTION EQUIVALENT TO SAND. A 14 GAUGE INSULATED COPPER TRACER WIRE SHALL BE INSTALLED PARALLEL TO PIPING. TRACER WIRE SHALL TERMINATE ABOVE GROUND AT EACH END OF THE PIPE SERVED. GAS PIPING ROUTED UNDER ASPHALT OR CONCRETE WALKS, DRIVEWAYS, ETC. SHALL BE SLEEVED IN A SCHEDULE 40 PVC VENTED PIPE A MINIMUM OF TWO PIPE SIZES LARGER THAN SERVICE PIPE.

GAS PIPE SHALL BE PROVIDED WITH SUITABLE DRIP LEGS ON ALL MAINS AND RISERS AT EQUIPMENT CONNECTIONS. ALL EQUIPMENT CONNECTIONS SHALL BE PROVIDED WITH AN AGA APPROVED BUTTERFLY VALVE. CAP WHERE REQUIRED.

PROVIDE SLEEVES AT ALL PIPING PENETRATING MASONRY WALLS AND PACKED WATERTIGHT WITH APPROVED PACKING.

UNIONS:
PROVIDE A UNION BETWEEN CONNECTIONS TO EACH FIXTURE, DEVICE OR PIECE OF EQUIPMENT FOR DISCONNECTING OF PIPING. PROVIDE DIELECTRIC UNION AT CONNECTIONS OF DISSIMILAR MATERIALS.

VALVES:
GATE VALVES: WATTS B-3001, 125#, BRONZE BODY, SOLDER TYPE GATE VALVE WITH NON-RISING STEM FOR ALL LINES UP THROUGH 3" SIZE.

CHECK VALVES: WATTS B-5001, 125#, BRONZE BODY, SOLDER JOINT CHECK VALVE WITH HORIZONTAL BRONZE DISC FOR ALL VALVES UP TO 2" SIZE. WATTS F-511-IBBM, 125#, IRON BODY, BRONZE TRIMMED, FLANGED HORIZONTAL CHECK VALVE FOR ALL VALVES LARGER THAN 2" SIZE.

BALANCING VALVE: (FOR SIZES 1/2" TO 2") WATTS CSM-61-MI-S (SOLDER JOINT) AND CSM-61-MI-T (THREADED JOINT), BRONZE BODY, BALANCING VALVE WITH MEMORY PLATE AND INSULATION KIT FOR INSULATED PIPE. (FOR SIZES 2 1/2" THRU 12") WATTS CSM-91 FLOW MEASUREMENT VALVES WITH MULTI-TURN ADJUSTMENT, POSITIVE SHUT OFF, TAMPER-PROOF MEMORY STOP AND GROOVED END CONNECTIONS WITH OPTIONAL FLANGE ADAPTERS.

BALL VALVES: WATTS B-6801 BRASS BODY, 3-PIECE, FULL PORT SOLDER JOINT BALL VALVE WITH REINFORCED PTFE SEATS, CHROME PLATED BALL AND BLOWOUT PROOF STEM FOR ALL LINE SIZES THROUGH 2".

GAS VALVES: WATTS FBV-3 2-PIECE FULL PORT BRASS BALL VALVE WITH BOTTOM LOADED PRESSURE RETAINING STEMS AND VIRGIN PTFE SEATS FOR NATURAL GAS SERVICE. VALVE SHALL BE PRESSURE RATED AT 600 PSI WOG (NON-SHOCK), 50 PSI SATURATED STEAM. UL, AGA, CGA & ANSI APPROVAL. PLUG VALVES, HOMESTEAD FIG. 611 FOR LINES 2" AND SMALLER AND FIG. 612 FOR LINES 2-1/2" AND LARGER, LUBRICATED PLUG VALVE WITH #555 LUBRICANT FOR NATURAL GAS SERVICE.

PIPE HANGERS:
PIPE HANGERS SHALL BE MICHIGAN #400 FOR STEEL PIPING, #402 FOR GAS AND COPPER PIPING. SUPPORT PIPING 3/4" AND LESS AT 6'-0" O/C, 1-1/4" AND SMALLER 8'-0" O/C, AND PIPING 1-1/2" AND LARGER 10'-0" O/C. WASTE PIPING SHALL BE SUPPORTED AT 5'-0" O/C. PROVIDE 3/8" DIAMETER. THREADED ROD PROPERLY BRACED FOR SEISMIC RESTRAINT ZONE 2.

PIPE INSULATION:
HOT WATER PIPING, HOT WATER RETURN PIPING AND COLD WATER PIPING IN RETURN AIR PLENUMS (IF APPLICABLE) SHALL HAVE 1" THICK FIBERGLASS INSULATION WITH ASJ JACKET, HAVING A THERMAL CONDUCTIVITY (K-FACTOR) OF 0.24 AT 75 DEGREES MEAN TEMPERATURE.

THE MAXIMUM FIRE HAZARD CLASSIFICATION OF THE INSULATION SYSTEM SHALL NOT HAVE MORE THAN A FLAME SPREAD OF 25, AND A FUEL CONTRIBUTED RATING OF 50, AND A SMOKE DEVELOPED RATING OF 50, WHEN TESTED IN ACCORDANCE WITH U.L. REQUIREMENTS. PIPE COVERING SHALL BEAR THE U.L. LABEL.

INSULATE ALL FITTINGS, VALVE BODIES, ETC. WITH SINGLE OR MULTIPLE LAYERS OF INSULATION, WITH PREFABRICATED FITTINGS AND P.V.C. JACKETS.

FIXTURES:
USE POLISHED CHROME PLATED ADJUSTABLE BRASS P-TRAPS AND WASTE ARMS, WITH WALL ESCUTCHEONS AT ALL EXPOSED LOCATIONS. USE POLISHED CHROME PLATED FAUCETS WITH BRASS BODY AND BRASS HANDLES. FIXTURES AND SUPPLY FITTING SHALL BE AS SPECIFIED. PROVIDE DIAPHRAGM TYPE POLISHED CHROME PLATED FLUSH VALVES WITH INTEGRAL VACUUM BREAKERS AND SCREW DRIVER STOPS OR PROVIDE FIXTURE STOPS AND VALVES AHEAD OF ALL EQUIPMENT OR FIXTURES. AFTER FIXTURES ARE SET IN PLACE AND SECURED TO WALLS, CAULK ALL AROUND BETWEEN FIXTURES AND WALL WITH EITHER "DOW CORNING #780" OR "G.E. CONSTRUCTION SEALANT" WHITE SILICONE CAULKING COMPOUND.

TESTS:
WATER PIPING TO 125 PSI AND HOLD FOR 4 HOURS.

SEWER AND VENT PIPING WITH A 10 FOOT HEAD FOR 4 HOURS.

FUEL GAS SYSTEM TO 75 PSI AIR PRESSURE AND HOLD FOR 8 HOURS. PURGE LINE WITH NITROGEN AT JUNCTION, WITH MAIN LINE AT GAS METER, TO REMOVE ALL AIR. CLEAR COMPLETE LINE BY ATTACHING A TEST PILOT FIXTURE AT CAPPED STUB-IN LINE AT THE BUILDING LOCATION, AND LET GAS FLOW UNTIL TEST PILOT IGNITES.

REPAIR ALL LEAKS UNTIL SYSTEMS ARE WATERTIGHT.
TEST AND OBTAIN APPROVAL ON ALL UNDERGROUND PIPING BEFORE COVERING WORK. PROVIDE WRITTEN TESTING REPORT TO ARCHITECT.

STERILIZATION:
STERILIZE THE ENTIRE WATER DISTRIBUTION SYSTEM THOROUGHLY WITH A SOLUTION CONTAINING NOT LESS THAN 50 PARTS PER MILLION OF AVAILABLE CHLORINE. FOR CHLORINATING MATERIALS, USE SODIUM HYPOCHLORITE SOLUTION CONFORMING TO FEDERAL SPEC. 0-8-441, GRADE D, AND INTRODUCE INTO THE SYSTEM BY USE OF A COCK AT A SLOW, EVEN, CONTINUOUS RATE. ALLOW THE STERILIZING SOLUTION TO REMAIN IN THE SYSTEM FOR A PERIOD OF 8 HOURS, DURING WHICH TIME ALL VALVES AND FAUCETS SHALL BE OPENED AND CLOSED SEVERAL TIMES. AFTER STERILIZATION, FLUSH THE SOLUTION FROM THE SYSTEM WITH CLEAN WATER UNTIL THE RESIDUAL CHLORINE CONTENT IS NOT GREATER THAN 0.2 PARTS PER MILLION. PLATE COUNT SHALL INDICATE COUNT LESS THAN 100 BACTERIA PER CC.

CLEANING:
AT THE COMPLETION OF THE WORK AND PRIOR TO FINAL ACCEPTANCE, ALL PARTS OF THE WORK INSTALLED UNDER THIS SPECIFICATION SHALL BE THOROUGHLY CLEANED. ALL EQUIPMENT, FIXTURES, PIPE, VALVES AND FITTINGS SHALL BE CLEANED OF GREASE, METAL CUTTINGS AND SLUDGE, WHICH MAY HAVE ACCUMULATED BY OPERATION OF THE SYSTEM FOR TESTING HEREIN BEFORE SPECIFIED OR FROM OTHER CAUSES.

WH NEW ELECTRIC WATER HEATER

MARK	MANUFACTURER	MODEL	STORAGE (GALLONS)	INPUT (KW)	ELECTRICAL DATA				TEMP. RISE (°F)	RECOVERY (GPH)	WEIGHT (LBS)	NOTES
					VOLTS	PHASE	HZ	FLA				
1	A.O. SMITH	DRE-52-12	50	12.0	460	3P	60	14.4	80	61	265 LBS	SEE BELOW

1. ROUTE NEW T&P TO 6" ABOVE MOP SINK.
2. SUPPORT EXPANSION TANK TO STRUCTURE.
3. PROVIDE SECONDARY DRAIN PAN AND ROUTE TO MOP SINK.
4. SIMULTANEOUS ELEMENT OPERATION.

RP RECIRCULATING PUMP SCHEDULE

MARK	MANUFACTURER	MODEL	G.P.M.	FT.HD.	H.P.	VOLTS	PH	NOTES
1	ARMSTRONG	S-25	8 GPM	10 FT	1/12	115	1	1,2,3

NOTES:
1. PUMP BODY SHALL BE CONSTRUCTED OF BRONZE.
2. PROVIDE MANUAL SHUT OFF FOR PUMP SHUTDOWN WHEN HW NOT REQUIRED.
3. PROVIDE WITH COMBINATION AQUASTAT AND TIMER.

FRANCHISEE: ______________________ ______________
SIGNATURE DATE

AD: ______________________ ______________
SIGNATURE DATE

PRESSURE DROP CALCULATION

PIPE LEN (TAP TO METER)	=	100 FT
PIPE LEN (METER TO LAST FIXTURE)	=	170 FT
TOTAL PIPE LENGTH	=	270 FT
FITTING LOSS (25%)	=	68 FT
TOTAL DEVELOPED LENGTH	=	338 FT
DESIGN PRESSURE	=	60 PSI
PRESSURE REQUIRED AT FIXTURE	=	-20 PSI
STATIC LOSS	=	-10 PSI
LOSS THRU NEW METER	=	-2.5 PSI
LOSS DUE TO RISER	=	-5 PSI
LOSS DUE TO SUMMER	=	-5 PSI
PRESSURE AVAILABLE FOR PIPING	=	17.5 PSI
PRESSURE LIMITED TO		8 PSI
PRESSURE DROP		
		17.5 PSI
X		100 FT
=		1750
/		337.5 FT
		5.185185185 AVG PRESSURE DROP PER 100'

SIZES BASED ON COPPER TYPE 'L' WITH C=140 (SMOOTH):

PIPE SIZING CHART

PIPE SIZE	GPM	F.U. (F.T.)	F.U. (F.V.)	VELOCITY*
1/2"	1.5	2	-	2.4
3/4"	7.8	8	-	3.5
1"	16	23	-	5.5
1-1/4"	28	49	11	6.0
1-1/2"	45	110	35	6.5

PLUMBING SYMBOLS LEGEND

SYMBOL	DESCRIPTION	SYMBOL	DESCRIPTION
	SOIL WASTE LINE (W)		BALL VALVE
	VENT LINE (V)		BUTTERFLY VALVE
	COLD WATER (CW)		CHECK VALVE
	HOT WATER (HW)		GAS COCK
	HOT WATER RETURN (HWR)		GATE VALVE (SHUT OFF)
	NATURAL GAS		GLOBE VALVE
TW	TEMPERED WATER		PRESSURE REDUCING VALVE
	CONDENSATE DRAIN		UNION (DIELECTRIC)
	ROOF DRAIN LEADER		FLOOR DRAIN (F.D.)
	OVERFLOW DRAIN LEADER		FLOOR SINK (F.S.)
CA	COMPRESSED AIR		ROOF DRAIN (R.D.)
	HOSE BIBB (HB)		OVER FLOW DRAIN
	VENT THRU ROOF	Ø SCO Ø FCO	SURFACE / FLOOR CLEANOUT
	POINT OF CONNECTION	ICO IWCO	CLEANOUT / WALL CLEANOUT

*** ALL SYMBOLS ON LEGEND MAY NOT APPLY TO DRAWING(S). ***

PLUMBING FIXTURE SCHEDULE

PLUMBING FIXTURES TO BE SUBMITTED AND APPROVED BY OWNER PRIOR TO PURCHASING

MARK	FIXTURE	DESCRIPTION	PIPE SIZE			
			CW	HW	WASTE	VENT
DS-1 55	DUMP SINK	TARRISON DI-14 S.S. SINGLE COMPARTMENT SINK,, WITH T&S BRASS #B-2855-0625F-0725-CD 2.5GPM BACK MTD. FAUCET W/ LEVER HANDLES & 9" SWING SPOUT	3/4"	3/4"	2"	1 1/2"
HS-1 15	HAND SINK	TARRISON TA-HS14SP S.S. SINGLE COMPARTMENT SINK, WITH T&S BRASS #B-2855-0625F-0725-CD 2.5GPM BACK MTD. FAUCET W/ LEVER HANDLES & 9" SWING SPOUT	3/4"	3/4"	2"	1 1/2"
SK-3 35	3-COMP SINK	TARRISON PS2-18R WITH A TYPE 304 STAINLESS STEEL TWIST HANDLE LEVER DRAIN, T&S GOOSENECK FAUCET, #B-0834-01, 4" WRIST BLADE HANDLES AND ANGLE STOPS	3/4"	3/4"	3"IND	–
PS-1 21	PREP SINK	TARRISON PS1-18R AND A TYPE 304 STAINLESS STEEL TWIST HANDLE LEVER DRAIN.	3/4"	3/4"	2"IND	–
MS-1 46	MOP SINK	FLORESTONE MSR-2424, SERVICE FAUCET 830-AA W/VACUUM BREAKER, PAIL HOOK AND 3/4" HOSE THREAD	3/4"	3/4"	3"	2"
ICE-1 45	ICE CUBER WITH BIN	ICE-O-MATIC HISU050FA PROVIDE MANUFACTURER RECOMMENDED WATER FILTER	3/4"	–	2"IND	–
CO WCO	WALL CLEANOUT	WATTS #CO-590-RD WALL CLEANOUT W/ BRONZE THREAD PLUG & WALL ACCESS COVER SIZE PER PLANS	–	–	–	–
FCO SCO	FLOOR/SURFACE CLEANOUT	WATTS #CO-200 WALL CLEANOUT W/ BRONZE THREAD PLUG & VERIFY FLOOR/SURFACE TYPE W/ARCHITECT, SIZE PER PLANS	–	–	–	–
FS	FLOOR SINK	JASAN 49000-2 FLOOR SINK W/ BOTTOM DOME STRAINER, HALF GRATE. PROVIDE WATERLESS SEAL	–	–	3"	2"
–	WATERLESS SEAL	SURE SEAL MODEL SS SS2009 FOR 2" TRAP SURE SEAL MODEL SS SS3009V FOR 3"TRAPS	–	–	–	–
–	TEMPERING MIXING VALVE (SET 105°) FOR HS	THERMOSTATIC MIXING VALVE, LEONARD MODEL 210-F, 1/2" SIZE WITH ANGLE CHECKSTOPS. EQUAL MANUFACTURERS – POWERS, SYMMONS	–	–	–	–

IND=INDIRECT WASTE TO A FLOOR SINK OR OTHER APPROVED DEVICE PER PLAN.
PROVIDE TEMPERING MIXING VALVE FOR NEW LAV FIXTURE(S).

IPC Fixture Loading

2012 IPC FIXTURE LOADING

FIXTURE TYPE	QTY	D.F.U. (EA)	TOTAL D.F.U.	HOT S.F.U. (EA)	COLD S.F.U. (EA)	COMBINED S.F.U. (EA)	TOTAL S.F.U. (HOT)	TOTAL S.F.U. (COLD)	TOTAL SERVICE S.F.U.
SERVICE SINK (MOP BASIN)	1	2.0	2.0	2.25	2.25	3.00	2.25	2.25	3.0
SPECIALTY KITCHEN EQUIP.									
SINK (DUMP) (1-1/2" IW)	1	2.0	2.0	1.50	1.50	2.00	1.5	1.5	2.0
SINK (HAND) (1-1/2" IW)	2	2.0	4.0	1.50	1.50	2.00	3	3	4.0
SINK (PREP / VEGGIE) (2" IW)	1	4.0	4.0	1.50	1.50	2.00	1.5	1.5	2.0
SINK (3 COMPARTMENT) (2" IW)	1	4.0	4.0	3.00	3.00	4.00	3	3	4.0
ICE MACHINE (3/4" IW)	1	0.5	0.5	0.00	1.00	1.00	0	1	1.0
TOTAL UNITS:	7		16.5				11.3	12.3	16.0
Total GPM:			18.2				15.55	16.125	18

THE FIXTURE UNIT LOADS IN THIS SCHEDULE ARE FOR PUBLIC USE - FOR BUILDINGS WITH PRIVATE OR ASSEMBLY USE, GO TO THE UNIFORM PLUMBING CODE TABLES 6-4 & 7-3 AND ADJUST SFU & DFU LOADS ACCORDINGLY

FOR BUILDINGS THAT ARE DWELLINGS WHERE AHJ HAS APPROVED APPENDIX L FOR "BATHROOM GROUPS", GO TO UNIFORM PLUMBING CODE TABLES L-1 & L-2 AND ADJUST SFU & DFU LOADS ACCORDINGLY

BELOW ARE GUIDELINES FOR SIZING WATER SERVICE LINES & SANITARY BUILDING DRAINS

TOTAL BUILDING DRAIN FIXTURE UNITS:	17	4.0	PIPE SIZE: (MIN SANITARY BUILDING DRAIN)
TOTAL WATER SERVICE FIXTURE UNITS[1]:	16.0	1.00	PIPE SIZE: (TYPE K CU @ 8 FPS, PRIMARILY FLUSH TANKS)
TOTAL HOT WATER FIXTURE UNITS:	11.3	1.0	PIPE SIZE: (TYPE L CU @ 5 FPS, PRIMARILY FLUSH TANKS)

PROVIDE 3/4" METER, 3/4" BFP AND 1-1/4" WATER SERVICE TO MEET MINIMUM REQUIREMENTS. MAX 29 WSFU @ 400' LENGTH

HOT WATER CALCULATIONS

DESCRIPTION	REQUIRED TEMP	FLOW (GPH)	QUANTITY	TOTAL FLOW (GPH)
PREP SINK	100°	5	1	5
HAND SINK	100°	5	2	10
DUMP SINK	100°	5	1	5
MOP SINK	120°	10	1	10
3-COMP SINK	120°	30	1	30
TOTAL FLOW (GPH)				60

STORAGE REQUIRED:
60 GPH x 0.75 = 45. GAL.
50 GALLONS PROVIDED

BTU REQUIRED:
$$\frac{50 \times 80^\circ \text{ TEMP RISE} \times 8.33}{.70 \text{ (OPERATING EFFICIENCY)}} = 23{,}324 \text{ BTUH}$$

MIN. 64414 BTUH x 0.00029307107 = 6.8 KW REQUIRED, 9 KW PROVIDED

bar napkin productions

2828 n central avenue
suite 1300
phoenix, az 85004
602 . 492 . 9494
www.bnp-llc.com

COMMONWEALTH OF VIRGINIA
MICHAEL M. NAKHLA
No. 043706
PROFESSIONAL ENGINEER

Tue Aug 16 2016 11:50:07

SURF CITY SQUEEZE SMOOTHIES

GREAT STEAK SURF CITY SQUEEZE

STORE 7621 1946

PROJECT LOCATION

11800 WEST BROAD ST.
SUITE 2116
RICHMOND, VA 23233

ISSUE DATE

CITY SUBMITTAL 07.29.16

PLUMBING SPECIFICATIONS/ SCHEDULES

BN1309

Design Management Solutions LLC

THESE DRAWINGS AND ASSOCIATED DOCUMENTATION CONTAIN INFORMATION, DESIGNS, CONCEPTS, AND DATA THAT ARE THE SOLE PROPERTY OF DESIGN MANAGEMENT SOLUTIONS LLC. THIS INFORMATION MAY NOT BE USED FOR ANY PURPOSE OTHER THAN ORIGINALLY INTENDED WITHOUT THE EXPRESSED WRITTEN CONSENT AND PERMISSION OF THE ENGINEER AND DESIGN MANAGEMENT SOLUTIONS LLC.

DMS#E0525 016-164
DFT: RSM
DSN: RSM
CHK: GL

P-1

© THIS DRAWING IS AN INSTRUMENT OF SERVICE AND THE PROPERTY OF BAR NAPKIN,LLC. THIS DRAWING MAY NOT BE REPRODUCED OR UTILIZED IN ANY MANNER WITHOUT THEIR WRITTEN PERMISSION.

8/16/2016 11:33:23 AM - C:\Backup\Dropbox\DMS Dropbox Projects\016-164 Surf City Squeeze GREAT STEAK Virginia\DMS CDs\016-164 Surf City Squeeze And Steakhouse - P.dwg - Sam

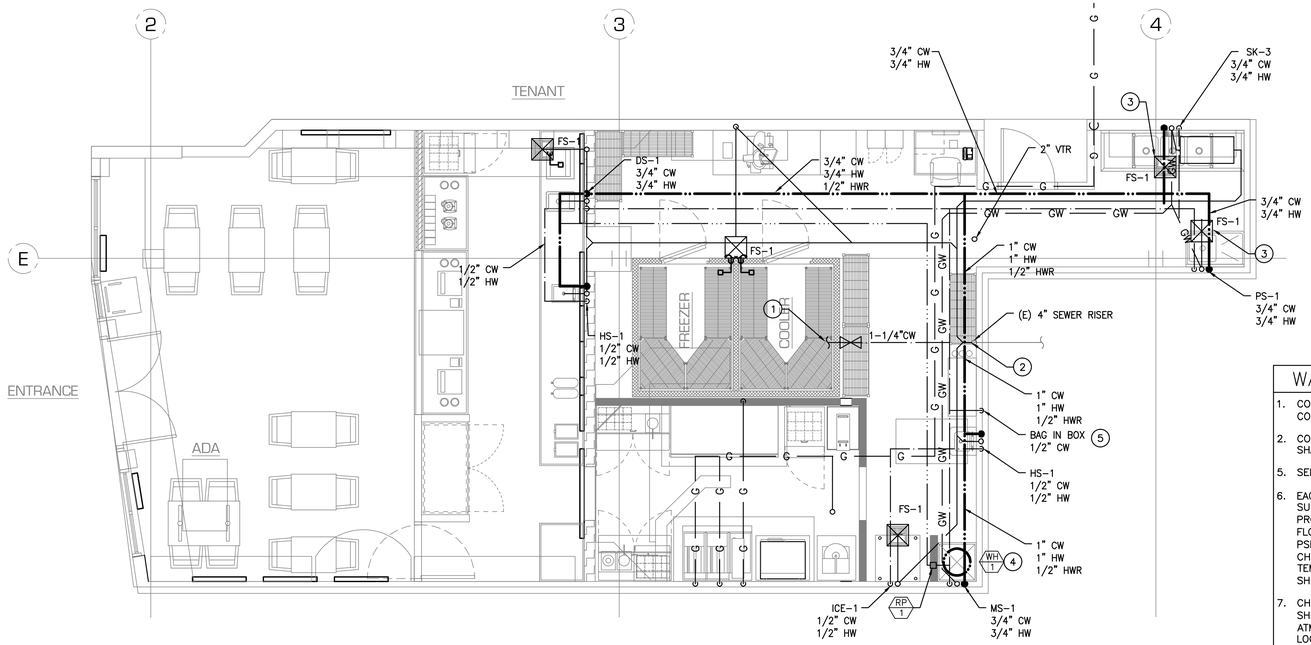

TENANT

PLUMBING PLAN

SCALE: 1/4" = 1'-0"

KEYED NOTES

1. PROVIDE WATER LINE TO EXISTING METER. FIELD VERIFY EXACT LOCATION OF ALL EXISTING PIPING.
2. CONNECT NEW WASTE LINE TO EXISTING PIPING. FIELD VERIFY EXACT LOCATION OF ALL EXISTING PIPING.
3. ROUTE INDIRECT WASTE LINE TO NEAREST FLOOR SINK, SIZE INDIRECT WASTE LINE PER SPEC SHEET.
4. MOUNT WATER HEATER ON A SHELF ABOVE MOP SINK.
5. PROVIDE CO2 PIPING PER BAG IN BOX REQUIREMENTS.

WATER GENERAL NOTES

1. CONTRACTOR TO COORDINATE / VERIFY EXACT LOCATIONS FOR ALL COLD WATER / R.O. WATER STUBS PRIOR TO SAWCUTTING.
2. COORDINATE WATER LINES WITH ELECTRICAL CONTRACTOR. PIPING SHALL NOT BE ROUTED OVER ELECTRICAL PANEL OR EQUIPMENT.
5. SEE DETAIL SHEETS P4 FOR ADDITIONAL INFORMATION.
6. EACH CHEMICAL DISPENSER MUST HAVE A DEDICATED 3/4" WATER SUPPLY, LOCATED WITHIN 4 FEET OF THE DISPENSER. IT MUST PROVIDE TEMPERED WATER (ADJUSTABLE FROM 60–120F) WITH A FLOW RATE OF 4 SPM AT 40 PSI DYNAMIC/FLOWING PRESSURE (35 PSID MIN.) THE HOT AND COLD WATER SUPPLY LINES MUST HAVE CHECK VALVES TO PREVENT HOT/COLD WATER CROSSOVER, IF THE TEMPERING VALVE DOES NOT INCLUDE THEM. IT MUST INCLUDE A SHUTOFF VALVE TERMINATING IN A 3/4" GARDEN HOSE MALE FITTING.
7. CHEMICAL DISPENSER CONTINUED– THE DEDICATED WATER SUPPLY SHOULD NOT HAVE ANY BACKFLOW PREVENTION (E.G. NO ATMOSPHERIC VACUUM BREAKER, ETC.), UNLESS REQUIRED BY THE LOCAL PLUMBING CODE OR UTILITY – EACH CHEMICAL DISPENSER INCLUDES AN INTEGRAL BACKFLOW PREVENTOR ASSE 1055)
8. WATER PIPING:
   ALL PIPING SHALL CONFORM TO THE REQUIREMENTS OF THE ANSI SAFETY CODE, BE FREE FROM ALL DEFECTS AND BE PROPERLY IDENTIFIED.

   ABOVE GROUND: SHALL BE TYPE "L" HARD DRAWN COPPER TUBING CONFORMING TO ASTM B 88–72.

   BELOW GROUND: (INSTALLED UNDER CONCRETE) TYPE "K" SOFT DRAWN COPPER TUBING, CONFORMING TO ASTM B 88–72, SPIRALLY WRAP PIPING BELOW GRADE OR FLOORS WITH 3 LAYERS OF 20 MIL POLYETHYLENE TAPE WITH 1/2 OVERLAP. INSTALL NO PIPING JOINTS BELOW FLOOR.

   ALL COPPER TUBING SHALL UTILIZE SWEAT FITTINGS SOLDERED WITH ASTM B 32, ALLOY SN95, SN94, OR E, LEAD FREE SOLDER.
6. COFFEE MACHINES AND NONCARBONATED BEVERAGE DISPENSERS. THE WATER SUPPLY CONNECTION TO COFFEE MACHINES AND NONCARBONATED BEVERAGE DISPENSERS SHALL BE PROTECTED AGAINST BACKFLOW BY A BACKFLOW PREVENTER CONFORMING TO ASSE 1022 OR BY AN AIR GAP.
7. DEVICES, APPURTENANCES, APPLIANCES AND APPARATUS INTENDED TO SERVE SOME SPECIAL FUNCTION, SUCH AS STERILIZATION, DISTILLATION, PROCESSING, COOLING, OR STORAGE OF ICE FOODS, AND THAT CONNECT TO THE WATER SUPPLY SYSTEM, SHALL BE PROVIDED WITH PROTECTION AGAINST BACKFLOW AND CONTAMINATION OF THE WATER SUPPLY SYSTEM. WATER PUMPS, FILTERS, SOFTENERS, TANKS AND OTHER APPLIANCES AND DEVICES THAT HANDLE OR TREAT POTABLE WATER SHALL BE PROTECTED AGAINST CONTAMINATION.
8. ALL CHEMICAL DISPENSER(S) WITH NO "AIR GAP" WITH NO "AIR GAP" WATER FILL WILL REQUIRE A BACKFLOW PREVENTER, I.E. SVB "SPILL RESISTANT VACUUM BREAKER", R.P.B.P. DEDICATED WATER SUPPLY TO CHEMICAL DISPENSER(S) MUST EXIT INTO MOP SINK; CONNECTION TO FAUCET WILL BE UNACCEPTABLE.

WASTE AND VENT GENERAL NOTES

1. CONTRACTOR TO COORDINATE / VERIFY EXACT LOCATIONS FOR ALL FLOOR DRAINS/FLOOR SINKS PRIOR TO SAWCUTTING.
2. COORDINATE WATER LINES WITH ELECTRICAL CONTRACTOR. PIPING SHALL NOT BE ROUTED OVER ELECTRICAL PANEL OR EQUIPMENT.
3. ALL FLOOR SINKS SHALL BE INSTALLED SO THAT TOP IS FLUSH WITH FLOOR TILE FINISH.
4. ALL CONDENSATE LINES, 3–COMP SINK MANIFOLD LINES, AND OTHER ABOVE GRADE PLUMBING LINES TO BE COPPER U.N.O.
5. ALL INDIRECT WASTE LINES SHALL BE SIZED IN ACCORDANCE WITH UPC AND SHALL NOT EXCEED 8'–0". PROVIDE CLEANOUTS AT ALL ANGLES AND CHANGES IN DIRECTION.
6. ALL CONDENSATE LINES TO BE RUN BY PLUMBING CONTRACTOR IN ACCORDANCE WITH ALL LOCAL PLUMBING CODES.
7. RTU CONDENSATE TO BE STUBBED WITHIN 18" OF UNIT. A/C CONTRACTOR TO MAKE FINAL TIE–IN.
8. VENT THRU ROOF. VERIFY IN FIELD A MIN. OF 10' FROM ANY OUTDOOR AIR INTAKE. SEE ISOMETRIC WHEN TWO OR MORE VENT PIPES CONVERGE EACH VENT PIPE SHALL RISE TO A POINT AT LEAST 6" IN HEIGH ABOVE THE FLOOD LEVEL.
9. SEE DETAIL SHEETS P4 AND P5 FOR ADDITIONAL INFORMATION.
11. SOIL, WASTE, AND VENT PIPING:
    CAST IRON: NO–HUB CAST IRON, CISPI 301–72T SPECIFICATION FOR ALL SOIL, WASTE AND VENT PIPING 2 INCHES AND LARGER WITH STANDARD WEIGHT FITTINGS. USE STAINLESS STEEL NO–HUB CAST IRON COUPLINGS THROUGHOUT THE PROJECT.

    GALVANIZED IRON: SCHEDULE 40 STANDARD WEIGHT CONFORMING TO ASTM A72–68, FOR ALL VENT PIPING 1–1/2" AND SMALLER. USE WROUGHT IRON SCREWED FITTINGS TO MATCH PIPE. MAKE ALL SCREWED JOINTS WITH TEFLON TAPE.

    ABS: ABS PIPING CONFORMING TO ASTM D2661–78 FOR ALL SOIL, WASTE AND VENT PIPING WITH MATCHING FITTINGS. ABS ABOVE AND BELOW GRADE FOR COMBUSTIBLE CONSTRUCTION OR ALLOWED BY LOCAL JURISDICTION. ABS FOR NON–COMBUSTIBLE CONSTRUCTION BELOW GRADE ONLY.

    ALL SOIL AND WASTE PIPING 3" AND SMALLER SHALL SLOPE MINIMUM OF 1/4" PER FOOT, PIPING 4" AND LARGER SHALL SLOPE MIN. OF 1/8" PER FOOT.
12. CONDENSATE DRAIN PIPING:
    INSTALL ALL PIPING ABOVE FLOOR UNLESS NOTED ON THE DRAWINGS. USE TYPE "M" HARD DRAWN COPPER FOR ALL CONDENSATE DRAIN LINES. USE WROUGHT COPPER SOLDER TYPE FITTINGS AT ALL COPPER CONNECTIONS. INSTALL PIPING WITH MINIMUM FALL OF 1/8" PER FOOT, FROM CONDENSATE PANS TO INDIRECT CONNECTIONS AT PLUMBING WASTE SYSTEM. PROVIDE TRAPS AT UNIT. MAKE CHANGES IN DIRECTION WITH TEES OR CROSSES. EQUIP THE EXTRA OPENING WITH THREADED BRASS PLUG FOR CLEANOUT ACCESS IN DIRECTION OF RUN, UNLESS THE CHANGE IN DIRECTION IS FROM HORIZONTAL TO VERTICAL. ON TEES INSTALLED VERTICALLY, LEAVE THE EXTRA OPENING OPEN FOR VENT PURPOSES, WITH AN EXTENSION AS REQUIRED TO RAISE OPENING ABOVE HYDRAULIC GRADE LINE. CLEAN PIPING AFTER INSTALLATION BY FLUSHING ENTIRE SYSTEM THOROUGHLY WITH CLEAN WATER. INSULATE ALL PRIMARY CONDENSATE DRAIN PIPING INSTALLED IN NON–CONDITIONED SPACE, WITH 3/8" THICK FLEXIBLE FOAMED PLASTIC CLOSED CELL PIPE INSULATION. INSULATION SHALL HAVE A "K" FACTOR OF .26 AT 70°F, ASTM C–177–63 AND ASTM C355–64.
13. IF THE RIM ELEVATION OF THE NEXT UPSTREAM SANITARY MANHOLE IS LESS THAN 12" BELOW THE FIRST FLOOR ELEVATION PROVIDE BACKWATER VALVE PER SECTION 715.1, IPC 2012, IBC 2012.
14. INDIRECT WASTE PIPING THAT HAS A DEVELOPED LENGTH GREATER THAN 30–INCHES (30") WHEN MEASURED HORIZONTALLY OR GREATER THAN 54–INCHES (54") IN TOTAL DEVELOPED LENGTH SHALL BE TRAPPED. EXCEPTION INDIRECT WASTE PIPING CONVEYING ONLY CLEAR–WATER WASTE (E.G. EFFLUENT FROM A SANITIZING COMPARTMENT) DOES NOT REQUIRE A TRAP. REFERENCE: SECTION 802.2, IPC 2012.
15. PROVIDE PROTECTION OF THE TRAP SEALS FOR ALL FLOOR DRAINS SUBJECT TO INFREQUENT USE. SECTION 1002.4, IPC 2012.
16. CLEANOUTS SHALL BE INSTALLED AT EACH CHANGE OF DIRECTION GREATER THAN 45 DEGREES IN THE BUILDING SEWER, BUILDING DRAIN AND HORIZONTAL WATER OR SOIL LINES. WHERE MORE THAN ONE CHANGE OF DIRECTION OCCURS IN A RUN OF PIPING, ONLY ONE CLEANOUT SHALL BE REQUIRED FOR EACH 40' OF DEVELOPED LENGTH PER IPC. THIS ALSO APPLIES TO CONDENSATE PIPING.
17. PROVIDE A RIGID COPPER WASTE DRAIN LINE INDIRECTLY CONNECTED WITH AN APPROVED MINIMUM 1–INCH OR GREATER AIR GAP PER LOCAL CODE TO THE WASTE THROUGH A FLOOR SINK OR APPROVED RECEPTACLE FOR THE FOLLOWING:
    CONDENSATE DRIP PAN/DRAIN LINE FOR REFRIGERATED AND FREEZER WALK–IN UNITS;
    ICE MACHINES, ICE BIN/JOCKEY BOX;
    REFRIGERATORS AND FREEZERS (UNLESS SELF–CONTAINED);
    RUNNING WATER DIPPER WELL;
    SINKS USED FOR FOOD PREPARATION;
    SODA FOUNTAINS;
    3–COMPARTMENT SINK/WARE WASHING SINKS;
    STEAMTABLES, STEAMER, STEAM OVENS, STEAM COOKERS, TILT KETTLES, (UNLESS SELF–CONTAINED);
    DIPPER WELLS;
    DISH WASH MACHINE;
    BUFFET BARS, SALAD BARS;
    POTATO PEELERS;
    OTHER SIMILAR FIXTURES
    FOOD SERVICE AND RELATED SINKS, AND SERVICE (MOP) SINKS CANNOT RECEIVE THE DISCHARGE OF AN INDIRECT WASTE PIPE. DRAIN LINES ARE NOT PERMITTED TO DISCHARGE INTO BUCKETS OR SIMILAR TEMPORARY WASTE RECEPTACLE. SUMP PUMPS ARE NOT ALLOWED, EXCEPT IN RARE ON–SITE ASSESSMENTS. IN SUCH CASE THAT A SUMP PUMP IS DEEMED ACCEPTABLE BY THE DEPARTMENT, AN ALARM SYSTEM WITH AUDIOVISUAL SIGNALS MAY BE REQUIRED. VACUUM EVACUATION SYSTEMS THAT ARE CERTIFIED TO ANSI STANDARDS REQUIRE APPROVAL PRIOR TO INSTALLATION.

FRANCHISEE: _____ _____
SIGNATURE DATE

AD: _____ _____
SIGNATURE DATE

Design Management Solutions LLC

THESE DRAWINGS AND ASSOCIATED DOCUMENTATION CONTAIN INFORMATION, DESIGNS, CONCEPTS, AND DATA THAT ARE THE SOLE PROPERTY OF DESIGN MANAGEMENT SOLUTIONS LLC. THIS INFORMATION MAY NOT BE USED FOR ANY PURPOSE OTHER THAN THE WORK DESCRIBED IN WRITING, EXPRESSED WITH CONSENT AND PERMISSION OF THE ENGINEER AND DESIGN MANAGEMENT SOLUTIONS LLC.

DMS#E0525
016–164
DFT: RSM
DSN:RSM
CHK:GL

© THIS DRAWING IS AN INSTRUMENT OF SERVICE AND THE PROPERTY OF BAR NAPKIN LLC. THIS DRAWING MAY NOT BE REPRODUCED OR UTILIZED IN ANY MANNER WITHOUT THEIR WRITTEN PERMISSION.

bar napkin productions
2828 n central avenue
suite 1300
phoenix, az 85004
602 . 492 . 9494
www.bnp-llc.com

COMMONWEALTH OF VIRGINIA
MICHAEL M. NAKHLA
No. 043706
PROFESSIONAL ENGINEER
Tue Aug 16 2016 11:49:37

SURF CITY SQUEEZE SMOOTHIES

GREAT STEAK SURF CITY SQUEEZE

STORE 7621 1946

PROJECT LOCATION

11800 WEST BROAD ST.
SUITE 2116
RICHMOND, VA 23233

ISSUE DATE	
CITY SUBMITTAL	07.29.16

PLUMBING PLAN

BN1309

P-2

8/16/2016 11:33:23 AM - C:\Backup\Dropbox\DMS Dropbox\Projects\016-164 Surf City Squeeze\GREAT STEAK Virginia\DMS CDs\016-164 Surf City Squeeze And Soukhouse-P.dwg - Sam

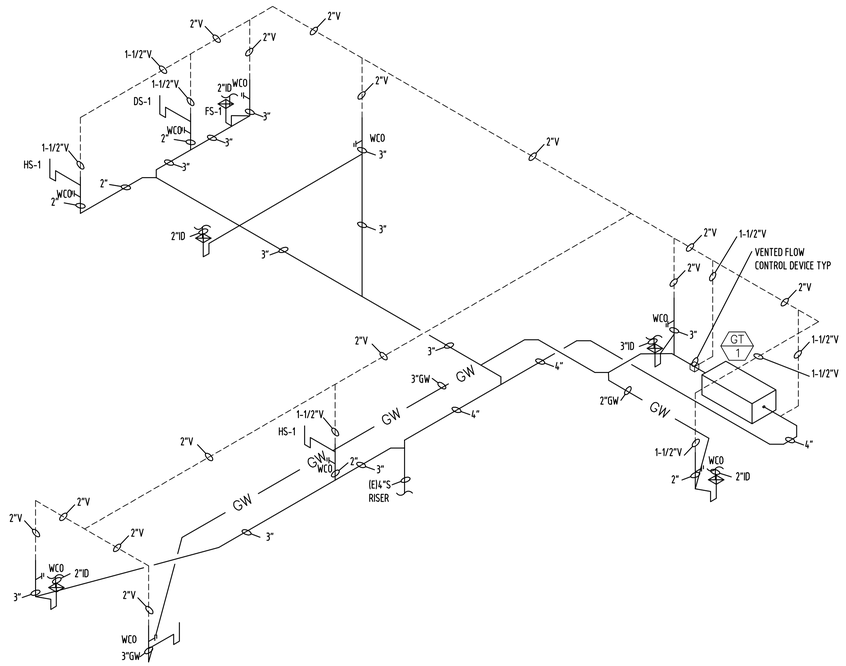

WASTE & VENT ISOMETRIC

SCALE: NONE

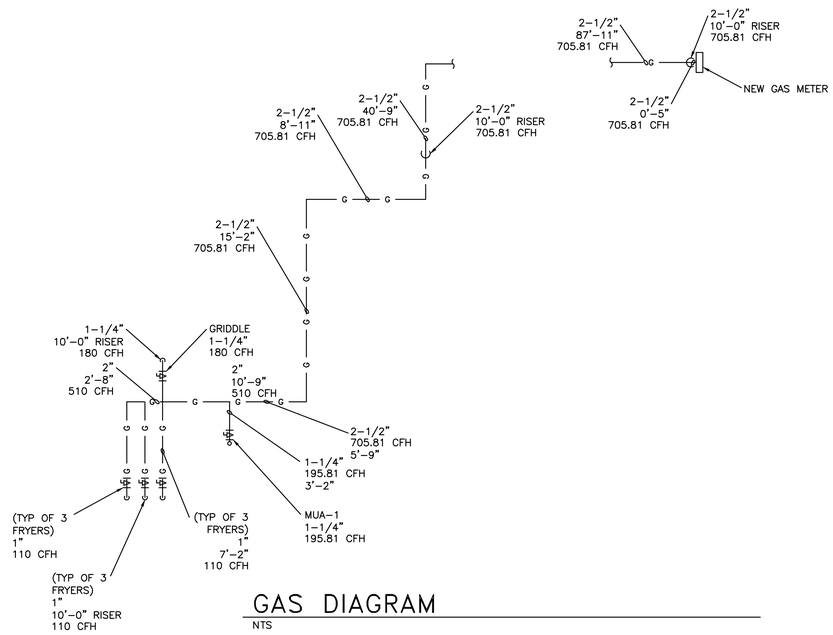

GAS DIAGRAM

NTS

GREASE WASTE TRAP SIZING

DESCRIPTION	QUANTITY	FIXTURE VALUE (GPM)	AVERAGING MULTIPLIER	FLOW RATING (GPM)
FLOOR SINK	2	20	0.25	10
3-COMP SINK	1	25	0.25	6.25
MOP SINK	1	25	0.25	6.25
TOTAL DRAINAGE FIXTURE-UNITS				22.5
MIN. GPM OF TRAP CALCULATED				50

NOTES:

PROVIDE A 50 GPM/100 LB CAPACITY GREASE TRAP. SEE PLUMBING FIXTURE SCHEDULE FOR MORE INFORMATION.

CALCULATION IS BASED ON IPC TABLE 1003.3.4.1.

NOTE:
ALL LAVS AND HAND SINKS WILL HAVE TEMPERING VALVE SET AT 100°. TEMPERED WATER DEVICES SHALL CONFORM TO ASSE 1070.

FRANCHISEE: _____ SIGNATURE _____ DATE

AD: _____ SIGNATURE _____ DATE

Design Management Solutions LLC

THESE DRAWINGS AND ASSOCIATED DOCUMENTATION CONTAIN INFORMATION, DESIGNS, CONCEPTS, AND DATA THAT ARE THE SOLE PROPERTY OF DESIGN MANAGEMENT SOLUTIONS LLC. THIS INFORMATION MAY NOT BE USED FOR ANY PURPOSE OTHER THAN THE WORK IN CONNECTION WITH THE EXPRESSED WRITTEN CONSENT AND PERMISSION OF THE ENGINEER AND DESIGN MANAGEMENT SOLUTIONS LLC.

DMS#E0525
016-164
DFT: RSM
DSN:RSM
CHK:GL

© THIS DRAWING IS AN INSTRUMENT OF SERVICE AND THE PROPERTY OF BAR NAPKIN LLC. THIS DRAWING MAY NOT BE REPRODUCED OR UTILIZED IN ANY MANNER WITHOUT THEIR WRITTEN PERMISSION.

bar napkin productions
2828 n central avenue
suite 1300
phoenix, az 85004
602 . 492 . 9494
www.bnp-llc.com

COMMONWEALTH OF VIRGINIA
MICHAEL M. NAKHLA
No. 043706
PROFESSIONAL ENGINEER
Tue Aug 16 2016 11:49:07

GREAT STEAK SURF CITY SQUEEZE

STORE 7621 1946

PROJECT LOCATION

11800 WEST BROAD ST.
SUITE 2116
RICHMOND, VA 23233

	ISSUE DATE
CITY SUBMITTAL	07.29.16

PLUMBING ISOMETRIC, GAS ISOMETRIC AND GAS CALC

BN1309

P-3

8/16/2016 11:33:23 AM - C:\Backup\Dropbox\DMS Dropbox Projects\016-164 Surf City Squeeze GREAT STEAK Virginia\DMS CDs\016-164 Surf City Squeeze And Southhouse - P.dwg - Sam

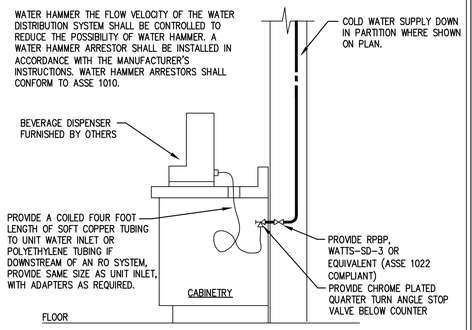

COMMENTS:
1. ARRANGEMENT SHOWN IS SCHEMATIC. ADJUST AS REQUIRED TO SUIT CONDITIONS. VERIFY CONNECTIONS WITH MANUFACTURER.

1	BEVERAGE WATER PIPING SCHEMATIC
NONE	

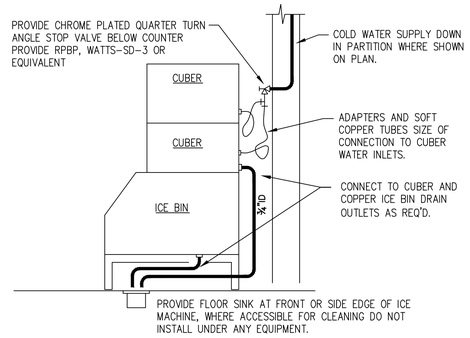

COMMENTS:
1. PROVIDE COLD WATER ROUGH-IN AT FRONT OF ICE MACHINE. ARRANGEMENT SHOWN IS SCHEMATIC. ADJUST AS REQUIRED TO SUIT CONDITIONS. VERIFY CONNECTIONS WITH MANUFACTURER.
2. INSTALL WATER FILTERS PER MANUFACTURER'S INSTRUCTIONS.

2	ICE MACHINE PIPING SCHEMATIC
NONE	

3	NOT USED
NONE	

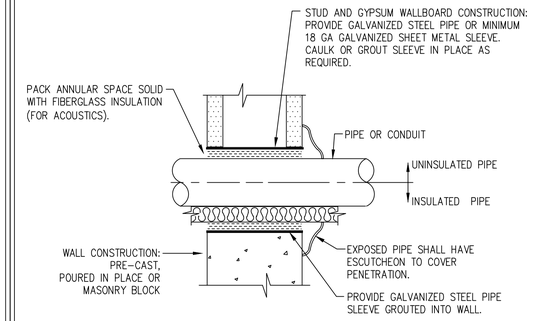

COMMENTS:
1. CENTER PIPE ALONG WITH THE INSULATION IN SLEEVE. CONTINUE THE INSULATION THRU THE SLEEVE.

4	PIPE PENETRATION (NON-RATED WALL)
NONE	

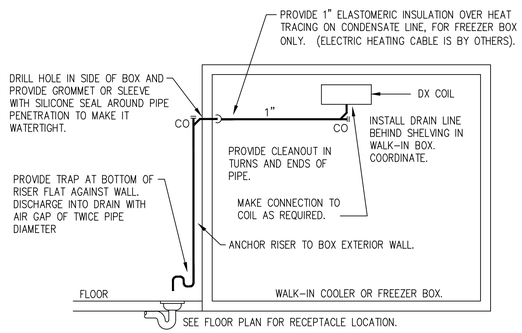

COMMENTS:
1. INSTALL PIPE HIGH AS POSSIBLE, ANCHORED TO WALL OF BOX WITH SUPPORTS AT MAXIMUM SIX FOOT CENTERS. USE TYPE "M" HARD COPPER TUBE AND FITTINGS WITH LEAD-FREE SOLDER JOINTS. SLOPE HORIZONTAL PIPE AT MINIMUM TWO PERCENT. PROVIDE CHROMATONE PAINT ON PIPE EXTERIOR TO BOX. REFER TO "INDIRECT DRAIN" DETAIL FOR OTHER REQUIREMENTS.

5	CONDENSATE DRAIN (WALK-IN BOX)
NONE	

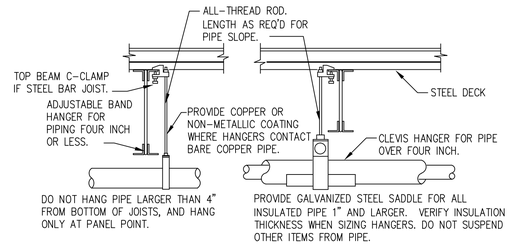

COMMENTS:
1. PROVIDE UPPER ATTACHMENT AS REQUIRED FOR CASES NOT SHOWN HERE. DO NOT INSTALL HANGER INSIDE INSULATION OR OTHERWISE PENETRATE VAPOR BARRIER. DO NOT HANG ONE PIPE FROM ANOTHER EXCEPT IN CHASES. TRAPEZE HANGERS MAY BE USED FOR MULTIPLE PARALLEL PIPES. SLOPE ALL WATER PIPING SLIGHTLY TOWARD DRAINABLE LOCATIONS. HANGER SPACING FOR PIPE SIZE: COPPER: 2"=9' 1½"=8' 1¼"=7' 1"=6' ¾"=6' ¾"=5'. CAST IRON: 10' AND ONE NEAR ALL JOINTS. STEEL: 3"=12' 2½"=11' 2"=10' 1 ½"=9' 1"=7' ¾"=6' ½"=5'. LOCATE HANGERS AS CLOSE AS POSSIBLE TO TURNS AND TEES OF PIPE. PROVIDE SUPPLEMENTARY STEEL STRUTS BETWEEN JOISTS IF REQUIRED. LOCATE HANGERS TO TAKE LOAD OFF OF EQUIPMENT CONNECTIONS. ANCHOR WATER PIPE AGAINST SWAYING DUE TO CHANGES IN WATER VELOCITY. PROVIDE SEISMIC BRACING AS REQUIRED BY LOCAL AUTHORITIES. CHAINS OR PERFORATED STRAP IRON OR STEEL IS NOT ACCEPTABLE. DO NOT SUSPEND PIPE FROM JOIST BRACING MEMBERS. REFER TO CODES AND SPECIFICATIONS FOR FURTHER INFORMATION.

6	PIPE HANGER DETAIL
NONE	

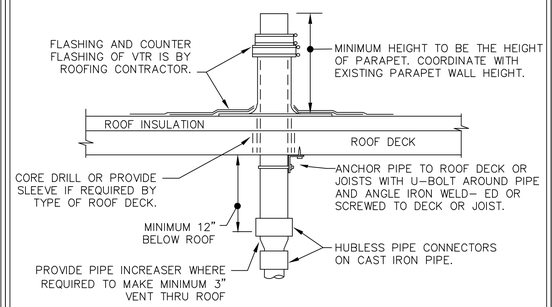

COMMENTS:
1. REFER TO PLANS FOR VTR PIPE SIZES AND LOCATIONS. LOCATE VTR MINIMUM THREE FEET FROM PROPERTY LINE, OR TEN FEET HORIZONTAL OR THREE FEET VERTICAL ABOVE ANY BUILDING OPENING OR FRESH AIR INTAKE, OR ONE FOOT FROM ANY VERTICAL SURFACE. LOCATE VTR MINIMUM 18" FROM PARAPET, EXPANSION JOINT, EQUIPMENT CURB, ETC. OFFSET IN CEILING SPACE WHERE REQUIRED TO MEET THESE CONDITIONS.

7	VENT THRU ROOF (VTR) DETAIL
NONE	

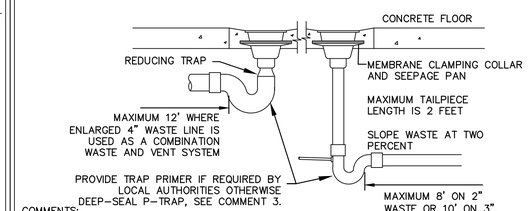

COMMENTS:
1. LOCATE FLOOR DRAIN/SINK WHERE SHOWN ON DIMENSIONED FLOOR PLAN. IF SITUATION IS FLOOR SLAB ON GRADE, SET DRAIN BODY IN PLACE, PROVIDE BACKFILL, AND POUR AROUND IT. RECESS TOP OF FLOOR DRAINS 1/2" BELOW FLOOR DATUM AND SLOPE FLOOR TO IT. DO NOT RECESS FLOOR SINKS.
2. OTHER VENTING METHODS MAY BE USED, IF APPROVED BY LOCAL CODE AND/OR LOCAL AUTHORITIES.
3. INDIRECT WASTE PIPING THAT HAS A LENGTH GREATER THAN 30" HORIZONTALLY OR GREATER THAN 54" IN TOTAL LENGTH SHALL BE TRAPPED. EXCEPTION INDIRECT WASTE PIPING CONVEYING ONLY CLEAR-WATER WASTE.

8	FLOOR DRAIN AND SINK DETAIL
NONE	

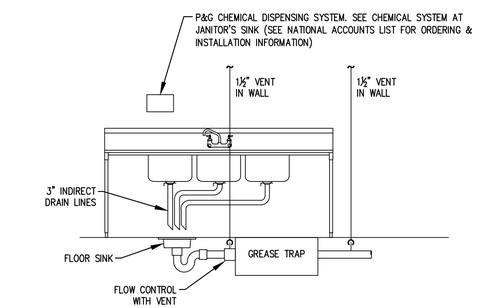

COMMENTS:
1. LOCATE ABOVE GRADE GREASE TRAP NEAR SINK AS NECESSARY ALLOWING EASY ACCESS TO THE REMOVABLE COVER FOR PERIODIC CLEANING UNLESS A GREASE INTERCEPTOR IS IN USE.
2. ARRANGEMENT SHOWN IS SCHEMATIC. ADJUST TO SUIT FIELD CONDITIONS OR MEET LOCAL CODE REQUIREMENTS. HUBLESS CAST IRON PIPE, FITTINGS AND CONNECTORS ALL AROUND SINK AND TRAP.
3. COORDINATE INDIVIDUAL BAY DRAINAGE, AIR GAP, & DRAIN FUNNEL WITH LOCAL CODE REQUIREMENTS.
4. PROVIDE SEPARATE INDIRECT WASTE PIPES FOR EACH GREASE WASTE COMPARTMENT TO PROTECT AGAINST CROSS-CONTAMINATION OR FOULING.

FRANCHISEE:

9	~~3 COMPARTMENT SINK DETAIL~~
NONE	

SIGNATURE DATE

AD:

SIGNATURE DATE

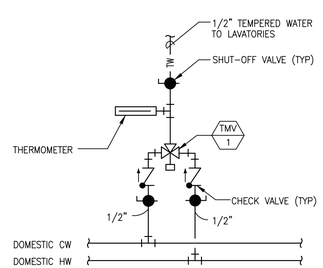

10	TEMPERING MIXING VALVE
NONE	

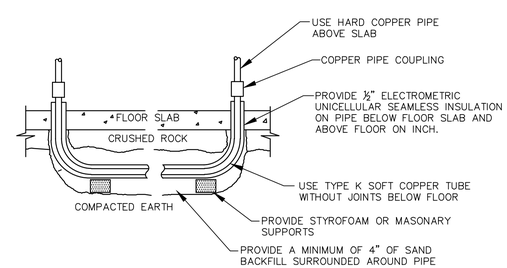

COMMENTS:
1. IF FLOOR SLAB IS EXISTING, SAW CUT FLOOR, EXCAVATE AS REQUIRED. INSTALL PIPING, REPAIR VAPOR BARRIER AND PATCH FLOOR AS REQUIRED.
2. PIPING TO HAVE LONG RADIUS TURNS WITH NO KINKS IN THE LINE.
3. THERE SHALL BE NO CONTACT OF COPPER PIPE WITH ANY OTHER PIPE, CONDUIT, OR REINFORCING STEEL.
4. SEPARATE HOT AND COLD WATER LINES BY 12" MINIMUM.

11	WATER PIPE UNDER SLAB
NONE	

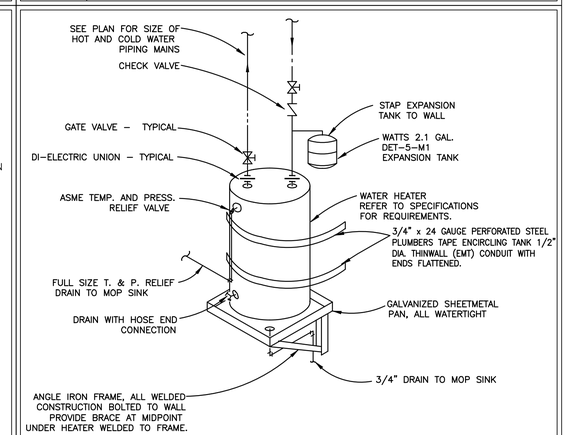

12	WATER HEATER DETAIL
NONE	

Design Management Solutions LLC

THESE DRAWINGS AND ASSOCIATED DOCUMENTATION CONTAIN INFORMATION, DATA, CONCEPTS, AND DATA THAT ARE THE SOLE PROPERTY OF DESIGN MANAGEMENT SOLUTIONS LLC. THIS INFORMATION MAY NOT BE USED FOR ANY PURPOSE OTHER THAN CONSTRUCTION OF THE SITE OR EXPRESSED WRITTEN CONSENT AND PERMISSION OF THE ENGINEER AND DESIGN MANAGEMENT SOLUTIONS LLC.

DMS#E0525 016-164
DFT: RSM
DSN:RSM
CHK:GL

bnp
bar napkin productions
2828 n central avenue
suite 1300
phoenix, az 85004
602 . 492 . 9494
www.bnp-llc.com

COMMONWEALTH OF VIRGINIA
MICHAEL M. NAKHLA
No. 043706
PROFESSIONAL ENGINEER

Tue Aug 16 2016 11:48:40

GREAT STEAK SURF CITY SQUEEZE

STORE 7621 1946

PROJECT LOCATION

11800 WEST BROAD ST.
SUITE 2116
RICHMOND, VA 23233

ISSUE DATE

CITY SUBMITTAL 07.29.16

PLUMBING DETAILS

BN1309

P-4

© THIS DRAWING IS AN INSTRUMENT OF SERVICE AND THE PROPERTY OF BAR NAPKIN LLC. THIS DRAWING MAY NOT BE REPRODUCED OR UTILIZED IN ANY MANNER WITHOUT THEIR WRITTEN PERMISSION.

8/16/2016 11:53:33 AM - C:\ Backup\ Dropbox\ DMS Dropbox Projects\ 016-164 Surf City Squeeze\ GREAT STEAK Virginia\ DMS CD's\ 016-164 Surf City Squeeze And Steakhouse - P.dwg - Sam

GENERAL NOTES

1. CONDUIT LAYOUTS SHOWN ON THE PLANS ARE DIAGRAMMATIC, NOT INDICATING THE EXACT ROUTING REQUIRED. THE CONTRACTOR SHALL ROUTE CONDUITS AS REQUIRED BY THE CONDITIONS OF INSTALLATION.
2. ALL EQUIPMENT PROVIDED BY THE ELECTRICAL CONTRACTOR SHALL BE LISTED AND LABELED BY A NATIONALLY–RECOGNIZED TESTING AGENCY, ACCEPTABLE TO THE AUTHORITY HAVING JURISDICTION, FOR THE CONDITIONS OF INSTALLATION.
3. DEVICE LOCATIONS SHOWN ON THE DRAWINGS ARE APPROXIMATE. EXACT DEVICE LOCATIONS SHALL BE AS INDICATED ON THE ARCHITECTURAL PLANS OR AS DIMENSIONED. IF NOT SHOWN ON THE ARCHITECTURAL PLANS OR DIMENSIONED ON THE ELECTRICAL PLANS, VERIFY EXACT LOCATION WITH THE ARCHITECT PRIOR TO ROUGH–IN.
4. ALL WIRE COUNTS ARE TYPICALLY NOT SHOWN BETWEEN LIGHT FIXTURES OR RECEPTACLES. PROVIDE ALL REQUIRED EVEN WHERE NOT SHOWN.
5. WHERE SIZE IS NOT SHOWN ON THE DRAWINGS, CIRCUITS SHALL CONSIST OF #12 PHASE AND GROUNDED (NEUTRAL CONDUCTORS) AND A #12 CU GROUND IN 3/4" CONDUIT.
6. UNLESS SPECIFICALLY NOTED OTHERWISE, THE ELECTRICAL CONTRACTOR SHALL MAKE FINAL CONNECTIONS TO ALL UTILIZATION EQUIPMENT SHOWN ON THE DRAWINGS. VERIFY THE TYPE OF FINAL CONNECTION AND PROVIDE APPROPRIATE WIRING METHOD.
7. THE ELECTRICAL CONTRACTOR SHALL COORDINATE WITH THE MECHANICAL, PLUMBING AND GENERAL CONTRACTORS, PRIOR TO ORDERING OR INSTALLATION OF ANY EQUIPMENT, MECHANICAL AND PLUMBING EQUIPMENT REQUIREMENTS ARE PROVIDED IN THE ELECTRICAL DESIGN. THE CONTRACTOR WILL NOT BE COMPENSATED FOR COSTS ASSOCIATED WITH CHANGING THE ELECTRICAL SYSTEMS TO MATCH UTILIZATION EQUIPMENT, EVEN IF THE ELECTRICAL WORK IS INSTALLED PER THE ELECTRICAL DRAWINGS.
8. INSULATION & WIRE TYPES SHALL BE AS FOLLOWED: PANEL FEEDERS – XHHW COPPER, WIRING ABOVE GRADE – THHN COPPER, WIRING BELOW GRADE – THWN COPPER, UNLESS NOTED OTHERWISE.
9. SOME CONDUCTOR SIZES ARE BASED ON THE USE OF 75 DEGREE C CONDUCTOR RATINGS. THE CONTRACTOR SHALL VERIFY, PRIOR TO INSTALLATION OF CONDUCTORS OR CONDUIT FEEDING ANY EQUIPMENT, THAT ALL ELECTRICAL EQUIPMENT IS RATED FOR USE WITH 75 DEGREE C WIRING. IF ANY EQUIPMENT IS RATED FOR USE WITH LESS THAN 75 DEGREE C CONDUCTORS, THE CONTRACTOR SHALL NOTIFY THE ENGINEER IMMEDIATELY FOR EVALUATION/CORRECTION.
10. UNLESS SPECIFICALLY NOTED OTHERWISE, SYSTEMS PROVIDED OR INSTALLED BY THE ELECTRICAL CONTRACTOR SHALL BE COMPLETE AND FULLY–FUNCTIONING AFTER INSTALLATION. COMPONENTS NOT SHOWN, BUT REQUIRED FOR THE PROPER OPERATION OF THE EQUIPMENT OR SYSTEM, SHALL BE PROVIDED AT NO ADDITIONAL COST TO THE PROJECT.
11. ALL RECEPTACLES INSTALLED WITHIN 6 FEET OF A SINK SHALL BE GFI PROTECTED.
12. UNLESS OTHERWISE NOTED, ALL EQUIPMENT DISCONNECTS SHALL BE NEMA TYPE 3R, FUSIBLE, 30A, 3 POLE. FUSE PER EQUIPMENT MANUFACTURER'S INSTALLATION INSTRUCTIONS.
13. DEVICE BOXES SHOWN BACK–TO–BACK SHALL BE OFFSET A MINIMUM OF TWELVE (12) INCHES TO REDUCE SOUND TRANSMISSION BETWEEN ROOMS.
14. ALL PENETRATIONS IN WALLS SHALL BE SEALED WITH FLEXIBLE ACOUSTIC CAULKING. CAULKING SHALL BE APPLIED AROUND OUTLET BOXES TO PROVIDE A COMPLETE SEAL BETWEEN THE BOX AND THE WALL.
15. ALL ELECTRICAL WORK SHALL BE IN ACCORDANCE WITH LOCAL AND STATE CODES INCLUDING THE NEC
16. ALL CABLE EXPOSED IN MECHANICAL AIR HANDLING PLENUM AREAS SHALL BE PLENUM RATED.
17. OVER CURRENT DEVICES SHALL BE LOCATED WHERE THEY WILL NOT BE EXPOSED TO PHYSICAL DAMAGE.
18. HOMERUNS SHALL NOT BE GANGED TOGETHER UNLESS SHOWN GANGED.
19. CONTRACTOR SHALL CONTACT ENGINEER IN WRITING (RFI) PRIOR TO PROCEEDING WITH ANY WORK NOT CLEARLY SHOWN ON THESE CONTRACT DOCUMENTS. ENGINEER WILL NOT ACCEPT ANY RESPONSIBILITY FOR WORK HE HAS NOT EXPLICITLY AUTHORIZED.
20. PROVIDE IDENTIFICATION AT THE DISTRIBUTION PANEL FOR BRANCH CIRCUITS THAT FEED EMERGENCY LIGHTING UNIT EQUIPMENT.
21. ELECTRICAL EQUIPMENT THAT IS LIKELY TO REQUIRE MAINTENANCE WHILE ENERGIZED SHALL BE PROPERLY MARKED TO WARN PERSONNEL OF ARC FLASH HAZARD.
22. IN EVENT OF A DISCREPANCY BETWEEN THE SPECIFICATIONS AND A NOTE ON THE DRAWINGS, THE DRAWING NOTES SHALL SUPERSEDE THE SPECIFICATIONS.
23. COORDINATION OF OVERCURRENT PROTECTIVE DEVICES SHALL BE BY ELECTRICAL CONTRACTOR INCLUDING SETTINGS OF CIRCUIT BREAKERS.
24. WHERE A MANUAL MOTOR STARTER IS SHOWN ON THE PLANS, THE CONTRACTOR SHALL VERIFY THE DEVICE PROVIDED IS LABELED "SUITABLE AS MOTOR DISCONNECT".
25. LIGHT FIXTURES IN SUSPENDED CEILINGS SHALL BE INSTALLED IN COMPLIANCE WITH BUILDING CODE. REQUIREMENTS INCLUDE, BUT ARE NOT LIMITED TO, THE FOLLOWING:
   a. LIGHT FIXTURES SHALL BE POSITIVELY ATTACHED TO THE SUSPENDED CEILING SYSTEM.
   b. INSTALL (OR VERIFY THE EXISTENCE OF) A #12 GAGE HANGER WIRE WITHIN 3" OF EACH CORNER OF THE LIGHT FIXTURE.
   c. PENDANT–HUNG FIXTURES SHALL BE SUPPORTED FROM THE STRUCTURE ABOVE WITH (2) #9 GAGE WIRES OR OTHER APPROVED SUPPORT METHOD WHICH DOES NOT DEPEND ON THE CEILING SUPPORT SYSTEM.
26. LIGHT FIXTURES MOUNTED IN CEILINGS WHICH FORM AN AIR–HANDLING SPACE (PLENUM) SHALL BE SPECIFICALLY LISTED FOR SUCH INSTALLATION.
27. LIGHT FIXTURES MOUNTED IN FIRE–RATED CEILINGS SHALL BE SPECIFICALLY LISTED TO MAINTAIN THE FIRE RATING.
28. WHERE THE PLANS INDICATE A LIGHT FIXTURE IS TO BE PROVIDED WITH SPECIAL FEATURES/SWITCHING (DIMMING, EMERGENCY, THREE–LEVEL, ETC) THE CONTRACTOR SHALL PROVIDE THESE FIXTURES WITH THE APPROPRIATE BALLASTING TO ACCOMMODATE THE SPECIAL FEATURE. THE CONTRACTOR SHALL PROVIDE THE FIXTURES AS INDICATED IN THE LIGHTING FIXTURE SCHEDULE, WITH MODIFICATIONS AS REQUIRED BY PLAN NOTES.
29. UTILITY COORDINATION
a. THE CONTRACTOR SHALL COORDINATE WITH THE ELECTRICAL AND TELCO UTILITIES AS REQUIRED FOR DESIGN.
30. THE ELECTRICAL CONTRACTOR SHALL REVIEW THE MECHANICAL PLANS, PRIOR TO BID, AND DETERMINE THE LOCATION OF SMOKE OR FIRE/SMOKE DAMPERS, IF ANY. UNLESS OTHERWISE NOTED ON THE ELECTRICAL PLANS, EACH SMOKE OR FIRE/SMOKE DAMPER SHALL BE CONNECTED TO THE NEAREST RECEPTACLE CIRCUIT, NOT TO EXCEED THREE (3) DAMPERS ADDED TO ANY CIRCUIT. INCLUDE IN THE BASE BID BID ONE (1) DUCT SMOKE DETECTOR PER SMOKE OR FIRE/SMOKE DAMPER SHOWN ON THE MECHANICAL PLANS.
31. UNLESS NOTED OTHERWISE, EACH DAMPER DUCT SMOKE DETECTOR SHALL BE RATED 24VAC AND SHALL BE CONNECTED TO THE FIRE ALARM PANEL (IF ANY) ON A SEPARATE ZONE.
32. SMOKE OR FIRE/SMOKE DAMPERS SHALL BE CONNECTED TO THE FIRE ALARM SYSTEM (IF ANY) AND SHALL BE CONTROLLED BY THE FIRE ALARM CONTROL PANEL (IF ANY).
33. THE ELECTRICAL CONTRACTOR SHALL REVIEW THE MECHANICAL PLANS, PRIOR TO BID, TO DETERMINE THE NUMBER AND LOCATION OF HVAC SYSTEMS RATED 2000 CFM OR HIGHER. THE ELECTRICAL CONTRACTOR SHALL INCLUDE, IN THE BASE BID, A DUCT SMOKE DETECTOR ON EACH UNIT FOR ALL SYSTEMS RATED 2000 CFM OR HIGHER. THE DETECTORS SHALL BE RATED 120VAC. PROVIDE THE DETECTORS TO THE MECHANICAL CONTRACTOR FOR INSTALLATION IN THE DUCT. MECHANICAL CONTRACTOR SHALL CONNECT EACH DETECTOR TO SHUT DOWN IT'S ASSOCIATED UNIT. ELECTRICAL CONTRACTOR SHALL MAKE CONNECTION TO THE FIRE ALARM CONTROL PANEL (IF ANY) ON A SEPARATE ZONE. NOTE THAT CERTAIN MUNICIPALITIES REQUIRE SMOKE DETECTORS ON BOTH THE SUPPLY AND RETURN DUCTS. SEE THE DRAWINGS TO DETERMINE IF THIS PROJECT REQUIRES THE EXTRA DETECTOR.
34. THE ELECTRICAL CONTRACTOR SHALL TAG EACH CIRCUIT CONDUCTOR AT EACH JUNCTION BOX, OUTLET, SWITCH, ETC WITH THE CORRESPONDING PANEL AND BRANCH CIRCUIT DESIGNATION FOR COMPLIANCE WITH NEC 408.4 FOR REQUIRED CIRCUIT IDENTIFICATION.
35. MC CABLE MAY BE UTILIZED FOR #10 AND #12 BRANCH CIRCUIT WIRING WITH THE FOLLOWING LIMITATIONS.
a. THE INSTALLATION IS IN ACCORDANCE WITH NEC ARTICLE 334.
b. MC CABLE USE IS LIMITED TO WIRING WITHIN PARTITIONS AND WALL AND TO CONNECTIONS TO AND BETWEEN SWITCHES AND WIRING DEVICES.
c. MC CABLE IS NOT TO BE USED FOR HOME RUN WIRING TO BRANCH CIRCUIT.HOME RUN CIRCUITING WILL BE INDIVIDUAL CONDUCTORS INSTALLED IN EMT CONDUIT.
36. SERIES RATING NOTES: WHERE A CIRCUIT BREAKER IS USED ON A CIRCUIT HAVING AN AVAILABLE FAULT CURRENT HIGHER THAN THE MARKED INTERRUPTING RATING BY BEING CONNECTED ON THE LOAD SIDE OF AN ACCEPTABLE OVERCURRENT PROTECTIVE DEVICE HAVING A HIGHER RATING, THE CIRCUIT BREAKER SHALL MEET THE REQUIREMENTS SPECIFIED IN (1) AND (2).
(1). TESTED COMBINATIONS. THE COMBINATION OF LINE–SIDE OVERCURRENT DEVICE AND
LOAD–SIDE CIRCUIT BREAKER(S) IS TESTED AND MARKED ON THE END USE EQUIPMENT,
SUCH AS SWITCHBOARDS AND PANELBOARDS;
(2). MOTOR CONTRIBUTION. SERIES RATINGS SHALL NOT BE USED WHERE
a. MOTORS ARE CONNECTED ON THE LOAD SIDE OF THE HIGHER–RATED OVERCURRENT DEVICE AND ON THE LINE SIDE OF THE LOWER–RATED OVERCURRENT DEVICE, AND
b. THE SUM OF THE MOTOR FULL–LOAD CURRENTS EXCEEDS 1 PERCENT OF THE INTERRUPTING RATING OF THE LOWER–RATED CIRCUIT BREAKER.

ELECTRICAL SYMBOLS

(NOT ALL SYMBOLS MAY BE USED ON THIS PROJECT).

LIGHTING

- NOMINAL 2' X 4' RECESSED FLUORESCENT LUMINAIRE. UPPER CASE LETTER INDICATES TYPE AS INDICATED ON THE LUMINAIRE SCHEDULE. NUMBER INDICATES THE CIRCUIT FEEDING THE FIXTURE. LOWER CASE LETTER INDICATES THE SWITCH CONTROLLING THE FIXTURE (NOTATION IS TYPICAL FOR ALL LIGHT FIXTURES).
- FLUORESCENT STRIP FIXTURE, LENGTH PER PLAN.
- NOMINAL 1' X 4' RECESSED CEILING–MOUNTED LUMINAIRE.
- SURFACE WALL–MOUNTED LIGHT FIXTURE.
- RECESSED WALL–MOUNTED LIGHT FIXTURE.
- RECESSED CEILING–MOUNTED FIXTURE
- SURFACE CEILING MOUNTED FIXTURE
- SOLID "JBOX" ON ANY FIXTURE INDICATES A FIXTURE WITH AN INTEGRAL EMERGENCY POWER SUPPLY, PER THE SPECIFICATIONS.
- RECESSED WALL WASH CEILING–MOUNTED FIXTURE
- LIGHTING TRACK WITH FIXTURES.
- TRACK HEAD OR FLOODLIGHT. SEE LIGHT FIXTURE SCHEDULE FOR SPECIFICATIONS.
- DUAL HEAD EMERGENCY LIGHT FIXTURE WITH BATTERY PACK. SEE LIGHT FIXTURE SCHEDULE FOR SPECIFICATION.
- CEILING MOUNTED EMERGENCY EXIT SIGN. ARROWS INDICATE PATH OF EGRESS (TYPICAL FOR ALL EXIT SIGNS).
- WALL MOUNTED EMERGENCY EXIT SIGN.
- BOLLARD– TYPE LIGHT FIXTURE.
- POLE–MOUNTED LIGHT FIXTURE.

DEVICES

- $ SINGLE POLE TOGGLE SWITCH
- $2 TWO–POLE TOGGLE SWITCH
- $3 THREE–WAY TOGGLE SWITCH
- $4 FOUR–WAY TOGGLE SWITCH
- $P SINGLE POLE TOGGLE SWITCH WITH PILOT LIGHT
- $K SINGLE POLE KEY OPERATED TOGGLE SWITCH
- $D DIMMER SWITCH
- $T MECHANICAL TIMESWITCH
- $M MOTOR RATED TOGGLE SWITCH
- PROGRAMMABLE TIMESWITCH
- PC PHOTOCELL , MOUNTED ON ROOF UNLESS NOTED OTHERWISE.
- DUPLEX CONVENIENCE RECEPTACLE
- GFCI "CROSS SLASH" ON ANY RECEPTACLE INDICATES INTEGRAL GROUND FAULT PROTECTION.
- DOUBLE DUPLEX (FOURPLEX) CONVENIENCE RECEPTACLE
- SINGLE CONVENIENCE RECEPTACLE
- DUPLEX CONVENIENCE RECEPTACLE MOUNTED ABOVE COUNTER TOP OR AS ARCHITECT'S INTERIOR ELEVATION FOR EXACT MOUNTING HEIGHT.
- DOUBLE DUPLEX (FOURPLEX) CONVENIENCE RECEPTACLE MOUNTED REQUIRED BY MILLWORK.
- SPLIT WIRED DUPLEX CONVENIENCE RECEPTACLE
- DUPLEX CONVENIENCE RECEPTACLE WITH AN ISOLATED GROUND CONNECTION.
- SPECIAL PURPOSE RECEPTACLE AS NOTED ON DRAWINGS (250 VOLT). NEMA CONFIGURATION AS INDICATED ON THE PLANS OR AS REQUIRED BY THE EQUIPMENT.
- SPECIAL PURPOSE RECEPTACLE AS NOTED ON DRAWINGS (600 VOLT). NEMA CONFIGURATION AS INDICATED ON THE PLANS OR AS REQUIRED BY THE EQUIPMENT.
- J C F JUNCTION BOX. 'C' INDICATES CEILING MOUNTED. 'F' INDICATES FLOOR MOUNTED (SUBSCRIPTS ARE TYPICAL FOR ALL DEVICES)
- POWER / VOICE–DATA DIVIDED RACEWAY.
- POWER / VOICE–DATA SERVICE POLE.
- VOICE OUTLET
- DATA OUTLET
- COMBINATION TELEPHONE AND DATA OUTLET IN THE SAME BOX
- TV TELEVISION OUTLET
- B BELL/BUZZER. SEE DRAWINGS FOR SPECIFICATION.
- PUSHBUTTON. SEE DRAWINGS FOR SPECIFICATION.

POWER

- $M HORSEPOWER RATED MANUAL MOTOR SWITCH
- $M OL HORSEPOWER RATED MANUAL MOTOR STARTER WITH THERMAL OVERLOAD(S).
- LIGHTING CONTACTOR IN SURFACE–MOUNTED ENCLOSURE
- LIGHTING CONTACTOR IN FLUSH–MOUNTED ENCLOSURE
- COMBINATION MOTOR CONTROLLER PROVIDED BY EQUIPMENT VENDOR, INSTALLED BY ELECTRICAL CONTRACTOR.
- COMBINATION MOTOR CONTROLLER PROVIDED AND INSTALLED BY ELECTRICAL CONTRACTOR.
- FUSIBLE DISCONNECT SWITCH FURNISHED AND INSTALLED BY THE ELECTRICAL CONTRACTOR UNLESS NOTED OTHERWISE. SIZE AND FUSES AS PER RECOMMENDATIONS OF EQUIPMENT'S MANUFACTURER OR AS NOTED. 30A, 3P, 250V, NEMA 3R UNLESS NOTED OTHERWISE. (N. INDICATES NON–FUSED).
- ELECTRICAL MOTOR. SEE DRAWINGS FOR SIZE.
- DISTRIBUTION PANELBOARD, MOTOR CONTROL CENTER OR SERVICE ENTRANCE SECTION. SEE DRAWINGS FOR EXACT TYPE.
- T DISTRIBUTION TRANSFORMER
- SURFACE MOUNTED PANEL BOARD.
- FLUSH MOUNTED PANEL BOARD.
- CABINET.
- TMB TELEPHONE MOUNTING BOARD.

WIRE/CONDUIT

- TEMPERATURE SEAL IN ACCORDANCE WITH ARTICLE 300–7 OF THE NEC.
- FLEXIBLE CONDUIT
- CONDUIT CONCEALED IN WALLS OR ABOVE CEILING W/ 2 #12, #12 GND, 3/4" C., UNLESS NOTED OTHERWISE.
- CONDUIT ROUTED UNDER FLOOR OR BELOW GRADE W/ 2 #12, #12 GRD., 3/4" C., UNLESS NOTED OTHERWISE.
- CONDUIT TURNING UP.
- CONDUIT TURNING DOWN.
- INDICATES A 'HOME–RUN' TO THE PANELBOARD
- INDICATES A PHASE CONDUCTOR
- INDICATES A GROUNDED (NEUTRAL) CONDUCTOR
- INDICATES AN EQUIPMENT GROUNDING CONDUCTOR
- INDICATES AN ISOLATED GROUND CONDUCTOR (SAME SIZE AS EQUIPMENT GROUNDING CONDUCTOR
- POWER BREAK TRANSITION POINT FROM ONE SOURCE OF POWER TO ANOTHER WITHIN A CONTINUOUS RACEWAY OR LIGHTING TRACK FED FROM MULTIPLE SOURCES.
- INDICATES THE CIRCUIT FEEDING THE RACEWAY OR TRACK IN THE DIRECTION OF THE ARROW.

SINGLE–LINE DIAGRAM

- CIRCUIT BREAKER, FIXED MOUNTED.
- CIRCUIT BREAKER, DRAWOUT MOUNTING.
- FUSIBLE SWITCH. SIZE AS INDICATED ON DRAWINGS.
- TRANSFORMER. SEE ONE–LINE FOR TYPE AND SPECIFICATION.
- CURRENT TRANSFORMER
- M METERING DEVICE
- PANELBOARD, MAIN LUG ONLY
- PANELBOARD, MAIN CIRCUIT BREAKER
- F FIRE ALARM MANUAL PULL STATION
- F FIRE ALARM HORN/STROBE
- S SMOKE DETECTOR.
- D DUCT MOUNTED SMOKE DETECTOR.
- FSMP FIRE SPRINKLER MONITORING PANEL.
- $M EF BATHROOM EXHAUST FAN WITH MOTOR RATED SWITCH
- OS DL OCCUPANT SENSOR (OS) DAYLIGHT SENSOR (DL) CEILING MOUNTED

ELECTRICAL SHEET INDEX

E1	GENERAL NOTES / LEGENDS / SHEET INDEX / ONE–LINE DIAGRAM / CALCULATIONS/
E2	PANEL SCHEDULES
E2.1	COMCHECK, LIGHTING SCHEDULE
E3	LIGHTING PLAN
E3.1	
E3.2	
E4	POWER PLAN
E4.1	
E4.2	
E5	SPECIFICATIONS

ABBREVIATIONS

A	AMPS/AMPERES
AFC	AVAILABLE FAULT CURRENT
AFF	ABOVE FINISHED FLOOR.
AFG	ABOVE FINAL GRADE.
AWG	AMERICAN WIRE GAUGE
C	CONDUIT
CU	COPPER MATERIAL
DED	DEDICATED
EF	EXHAUST FAN
EM	EMERGENCY/EGRESS BATTERY
EMT	ELECTRICAL METALLIC TUBING
ENT	ELECTRICAL NON–METALLIC TUBING
ER	EXISTING TO BE RELOCATED AS INDICATED.
EX	EXISTING TO REMAIN.
FMC	FLEXIBLE METAL CONDUIT
GEC	GROUNDING ELECTRODE CONDUCTOR AT THE SES
GFCI	GROUND FAULT CURRENT INTERRUPTER.
GND	GROUND
MC	INTERMEDIATE METAL CONDUIT
G	ISOLATED GROUND
KCMIL	1000 CIRCULAR MILS (MCM)
LFMC	LIQUID–TIGHT FLEXIBLE METAL CONDUIT
LFNC	LIQUID–TIGHT FLEXIBLE NON–METALLIC CONDUIT
N	NEW.
N1	NEMA 1.
N3R	NEMA 3R.
NL	NIGHT LIGHT. BYPASS LOCAL SWITCHING.
OS	OCCUPANCY SENSOR
RNC	RIGID NONMETALLIC CONDUIT
UNO	UNLESS NOTED OTHERWISE.
WP	WEATHERPROOF.
XP	EXPLOSION PROOF.
XR	EXISTING TO BE REMOVED.

NOTE:

WHERE CIRCUIT BREAKERS OR FUSES ARE APPLIED IN COMPLIANCE WITH THE SERIES COMBINATION RATINGS MARKED ON THE EQUIPMENT BY THE MANUFACTURER, THE EQUIPMENT ENCLOSURE(S) SHALL BE LEGIBLY MARKED IN THE FIELD TO INDICATE THE EQUIPMENT HAS BEEN APPLIED WITH A SERIES COMBINATION RATING. THE MARKING SHALL BE READILY VISIBLE AND STATE THE FOLLOWING:
A. CAUTION _____ SERIES COMBINATION SYSTEM RATED _____ AMPERES.
B. IDENTIFIED REPLACEMENT COMPONENTS REQUIRED.

INVESTIGATION OF CONDITIONS

EXAMINE THE CONTRACT DRAWINGS AND ALL AVAILABLE INFORMATION CONCERNING EXISTING INSTALLATION, STRUCTURE, AND LOCAL CONDITIONS. VISIT THE SITE TO UNDERSTAND THE NATURE AND SCOPE OF ALL WORK TO BE PERFORMED AND VERIFY EXISTING CONDITIONS. THE SUBMISSION OF A BID WILL BE TAKEN AS EVIDENCE THAT SUCH AN EXAMINATION HAS BEEN MADE AND THAT ALL EXISTING CONDITIONS HAVE BEEN CONSIDERED.

bnp
bar napkin productions
2828 n central avenue
suite 1300
phoenix, az 85004
602 . 492 . 9494
www.bnp-llc.com

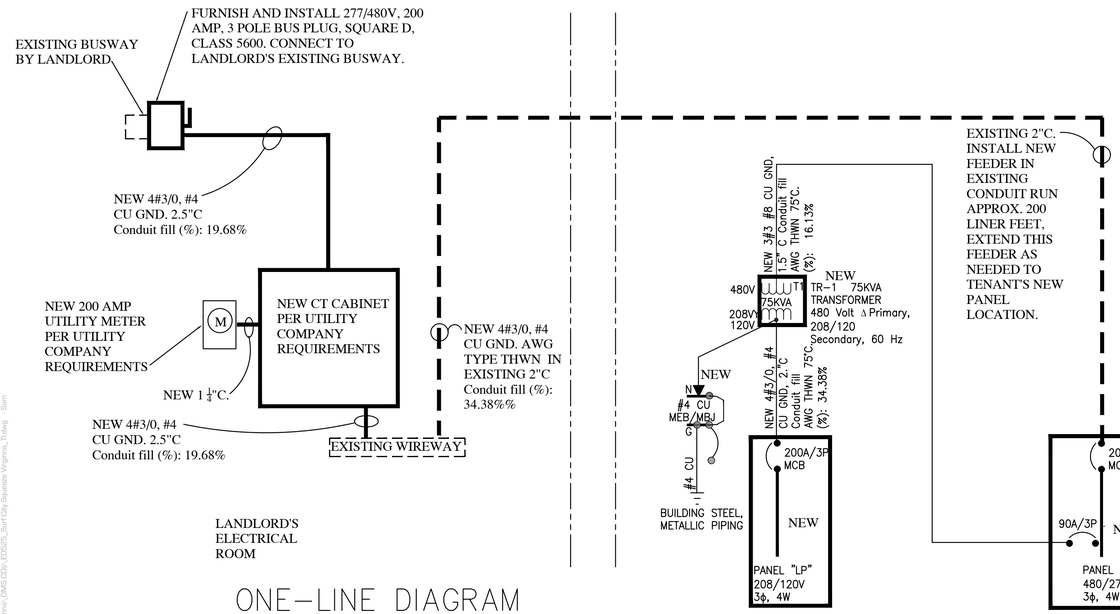

ONE–LINE DIAGRAM

N.T.S. ALL ELECTRICAL EQUIPMENT IS EXISTING AND FOR REFERENCE ONLY, UNLESS NOTED OTHERWISE.

CONTRACTOR EQUIPMENT REQUIREMENTS

ELECTRICAL SERVICE EQUIPMENT -SWITCHBOARDS - PANELS - GENERAL

PRIOR TO THEIR PURCHASE OR MANUFACTURER, THE CUSTOMER / CONTRACTOR SHALL SUBMIT 2 COPIES OF THE DRAWINGS OF THE PROPOSED ELECTRICAL SERVICE EQUIPMENT - SES, SWITCHBOARD, ITS LOCATION, AND PAD DESIGN TO THE ELECTRICAL UTILITY COMPANY SERVICING THIS PROJECT LOCATION.

Additionally, the customer shall consult the electrical utility company for specific information on the following:
a. Service voltage, current rating, and fault duty.
b. Meter panel requirements for applicable rate schedule
c. Service termination location
d. Switchboard and/or meter location(s)
e. Size and number of service conductors and conduits per phase.
f. The rating of the metering current transformers will not necessarily be the same as the current rating of the service switch. Fault duty rating will exceed given fault duty.

In the event that, the electrical utility company requirements for the electrical service equipment -switchboards - panels - general, is different, in any way, from this ONE-LINE DIAGRAM, i.e. available fault current, utility transformer size or location, (a thru f above) etc., It will be the sole responsibility and obligation of the Customer / Contractor to do as follows.
The engineer of record must be notified in writing, by the customer / contractor, and be given the time to correct any discrepancy, and calculations, as required by the electrical utility company, prior to the purchase or manufacturer of any electrical equipment.

DEMOLITION NOTES

1. IT SHALL BE THE RESPONSIBILITY OF THE CONTRACTOR TO REMOVE EXISTING EQUIPMENT AS REQUIRED TO ACCOMPLISH THE NEW WORK AS SHOWN OR REASONABLY IMPLIED. THE CONTRACTOR SHALL REFER TO THE NEW ARCHITECTURAL, PLUMBING, FIRE PROTECTION, MECHANICAL AND ELECTRICAL WORK SHOWN ON THE OTHER DRAWINGS OF THIS SET TO DETERMINE THE EXTENT OF DEMOLITION REQUIRED.
2. WHEN REMOVING ELECTRICAL EQUIPMENT AND SYSTEMS, ALL PRECAUTIONS SHALL BE TAKEN TO PREVENT STRUCTURAL DAMAGE TO THE BUILDING. THE CONTRACTOR SHALL COORDINATE INSTALLATION OF ANY STRUCTURAL SUPPORTS REQUIRED, TEMPORARY OR PERMANENT.
3. THE CONTRACTOR SHALL EXERCISE CARE SO THAT ONLY THAT CONSTRUCTION INDICATED OR REASONABLY IMPLIED TO BE REMOVED SHALL BE DEMOLISHED. THE EXISTING CONSTRUCTION TO REMAIN SHALL BE LEFT INTACT AND UNDAMAGED. THE CONTRACTOR SHALL PROTECT ALL ADJACENT SURFACES AND MATERIALS AS REQUIRED TO PREVENT DAMAGE. THE CONTRACTOR SHALL BE RESPONSIBLE FOR THE REMOVAL OF ALL DEMOLITION AND CONSTRUCTION DEBRIS GENERATED FROM ALL WORK. TAKING CARE TO PREVENT EXCESSIVE LOADING OF FLOOR ASSEMBLIES.
4. THE CONTRACTOR SHALL BE RESPONSIBLE FOR THE REMOVAL OF ALL DEMOLITION AND CONSTRUCTION DEBRIS GENERATED FROM ALL WORK. TAKING CARE TO PREVENT EXCESSIVE LOADING OF FLOOR ASSEMBLIES.
5. THE CONTRACTOR SHALL MAINTAIN CONTINUITY OF CIRCUITS WHERE EXISTING EQUIPMENT IS TO BE REMOVED AND DOWN STREAM DEVICES MAY BE EFFECTED.
6. THE CONTRACTOR SHALL COORDINATE ALL POWER INTERRUPTIONS WITH OWNER. SEE SPECIFICATIONS.
7. WHEN EXISTING ELEMENTS OF ELECTRICAL EQUIPMENT AND SYSTEMS ARE REMOVED, ALL REMAINING OPENINGS IN THE SLAB AND WALLS SHALL BE FILLED IN BY THE CONTRACTOR.
8. REMOVE ALL MISCELLANEOUS FIXTURES AND EQUIPMENT RETAINING ITEMS TO BE IDENTIFIED FOR SALVAGE AND STORAGE AT THE DIRECTION OF THE OWNER.
9. THE CONTRACTOR SHALL TAKE ALL NECESSARY PRECAUTIONS DURING DEMOLITION AND CONSTRUCTION TO MAINTAIN THE INTEGRITY AND OPERATION OF EXISTING LIFE SAFETY AND EMERGENCY EGRESS EQUIPMENT.
10. THE CONTRACTOR SHALL TAKE ALL NECESSARY PRECAUTIONS DURING DEMOLITION AND CONSTRUCTION TO MAINTAIN ACCESS TO ALL MEANS OF EGRESS CORRIDORS, DOORWAYS AND STAIRS.
11. THE CONTRACTOR SHALL TAKE ALL NECESSARY PRECAUTIONS DURING DEMOLITION AND CONSTRUCTION TO PERMIT EFFECTED AREAS TO CONTINUE TO FUNCTION TO THE GREATEST EXTENT POSSIBLE. THIS EFFORT SHALL INCLUDE SCHEDULED COORDINATION WITH OWNER OF ELECTRICAL SHUTDOWNS.
12. THE CONTRACTOR SHALL BE RESPONSIBLE FOR THE REMOVAL OF ALL FLUORESCENT AND HID TYPE LAMPS AND PROPER DISPOSAL OF SAID LAMPS AND SHALL PROVIDE VERIFICATION OF LAMP DISPOSAL TO THE OWNER UPON REQUEST.

FRANCHISEE: _____ _____
SIGNATURE DATE

AD: _____ _____
SIGNATURE DATE

Design Management Solutions LLC

THESE DRAWINGS AND ASSOCIATED DOCUMENTATION CONTAIN INFORMATION, DESIGNS, CONCEPTS, AND DATA THAT ARE THE SOLE PROPERTY OF DESIGN MANAGEMENT SOLUTIONS LLC. THIS INFORMATION MAY NOT BE USED FOR ANY PURPOSE OTHER THAN THE ORIGINALLY INTENDED WITHOUT THE EXPRESSED WRITTEN CONSENT AND PERMISSION OF THE ENGINEER AND DESIGN MANAGEMENT SOLUTIONS LLC.

DMS#E0525
016–164
DFT: RSM
DSN:RSM
CHK:GL

© THIS DRAWING IS AN INSTRUMENT OF SERVICE AND THE PROPERTY OF BAR NAPKIN,LLC. THIS DRAWING MAY NOT BE REPRODUCED OR UTILIZED IN ANY MANNER WITHOUT THEIR WRITTEN PERMISSION.

GREAT STEAK SURF CITY SQUEEZE
STORE 7621 1946

PROJECT LOCATION
11800 WEST BROAD ST.
SUITE 2116
RICHMOND, VA 23233

ISSUE DATE
CITY SUBMITTAL 07.29.16

BN1309

E1 GENERAL NOTES / LEGENDS / SHEET INDEX / ONE–LINE DIAGRAM / CALCULATIONS/

NEW — ELECTRICAL PANEL SCHEDULE

PANEL: LP — 10KAIC FULLY RATED

Voltage : 208VY/120V, 3Ø , 4W
LOCATION:
MAINS: 200 Amp MCB
SURFACE — NEMA RATING : 1
BUS: 225 Amp CU

LOAD DESCRIPTION	SIZE C. ITEM #	CU GRND	PHASE NEUT	CKT BRKR	CIR NO.	LOAD AMPS PHASE A	PHASE B	PHASE C	CIR NO.	CKT BRKR	PHASE NEUT	CU GRND	SIZE C. ITEM #	LOAD DESCRIPTION
MISC	3/4"	12	12	20	1	10.0				50	6	8	1"	KITCHEN
(2) POINT OF SALE TERMINAL	#1					37.5			2	2			#17	CONVECTION OVEN
MISC	3/4"	12	12	20	3		10.0			HSCP	6			
(2) THERMAL RECEIPT PRINTER	#2						37.5		4	HACR				
MISC	3/4"	12	12	20	5			10.0		20	12	12	3/4"	KITCHEN
BEVERAGE DISPENSER	#22							6.7	6	HSCP			#20	CONTROL :GRIDDLE/FRYER GAS
MISC	3/4"	12	12	20	7	8.3				20	12	12	3/4"	MECH
SANDWICH / SALAD UNIT (27")	#6					10.2			8	3				MAU-1 AND EF-1
MISC	3/4"	12	12	20	9		8.3				12			
SANDWICH / SALAD UNIT (48") A	#7						10.2		10	HSCP				
MISC	3/4"	12	12	20	11			8.3			12			
SANDWICH / SALAD UNIT (48") B	#7							10.2	12	HACR				
KITCHEN	3/4"	12	12	20	13	8.3				20	12	`	3/4"	MECH
FOOD WARMER	#9					12.5			14	2				BLOWER WALK-IN
KITCHEN	3/4"	12	12	20	15		8.3				12			
DRAWER WARMER	#10						12.5		16	HACR				REF & FREEZER
KITCHEN	3/4"	12	12	20	17			8.3		60	6	8	1"	MECH (LARGEST)
MEAT SLICER	#11							37.5	18	3				COMPRESOR WALK-IN
KITCHEN	3/4"	12	12	20	19	8.3					6			
CUTTER/MIXER	#13					37.5			20					REF & FREEZER
KITCHEN	3/4"	12	12	20	21		8.3				6			
(2) PREMIX DISPENSER	#14						37.5		22	HACR				
KITCHEN	3/4"	12	12	20	23			8.3		50	6	8	1"	MISC
MICROWAVE OVEN	#16							37.5	24	2			#45	STAND ALONE ICE MACHINE
MISC	3/4"	12	12	20	25	8.3					6			
BEVERAGE DISPENSER	#22					37.5			26	HACR				W/ BIN
MISC	3/4"	12	12	20	27		8.3			20	12	12	3/4"	KITCHEN
TEA AND COFFEE DISPENSER	#23						8.3		28				#50B	GYROS MACHINE AND 26" STAND
MISC	3/4"	12	12	20	29			10.3		20	12	12	3/4"	MISC
MENU BOARD (6) & 2 MONITORS	#25							8.3	30				#50C	UNDER COUNTER REFRIGERATOR
LIGHTING	3/4"	12	12	20	31	3.3				20	12	12	3/4"	MISC
LIGHT BOX	#27					8.3			32				#51	SANDWICH / SALAD UNIT (27")
LIGHTING	3/4"	12	12	20	33		8.3			20	12	12	3/4"	KITCHEN
WALK - IN COOLER/ FREEZER	#37						8.3		34				#53	(2) BLENDER
RECEPTACLES	3/4"	12	12	20	35			10.0		20	12	12	3/4"	RECEPTACLES
DESK, MUZAK	#43							12.0	36					CONVENIENCE, ROOF
RECEPTACLES	3/4"	12	12	20	37	1.5				20	12	12	3/4"	MISC
TMB	#44					5.0			38	LC				SIGN, TIME SWITCH & CONTACTOR
MISC	3/4"	12	12	20	39		8.3			20	12	12	3/4"	MISC
BAG - IN- BOX /CO2	#50						5.0		40	FA				ANSUL SSTEM
LIGHTING	3/4"	12	12	20	41			5.0		20	12	12	3/4"	MISC
HOOD	#50A							5.0	42	FA				HSCP
AMPS PER PHASE (CONNECTED LOAD)						196.7	179.4	177.5						

LIGHTING	2000.0
25% OF LIGHTING	500.0
RECEPTACLES	2820.0
MECH (LARGEST) @ 1.25%	13500.0
MECHANICAL	6672.0
MISCELLANEOUS	23640.0
KITCHEN EQUIPMENT => 6 UNITS @6	11570.0
TOTAL CODE VA	60702.0

60.7 KW @ 208V, 3Ø
168.6 Amps @ 208V, 3Ø (CODE LOAD)

SYMBOL LIST
(HSCP) VIA HOOD SYSTEM CONTROL PANEL
(FA) FIRE ALARM CB, PROVIDE HANDLE LOCK-ON DEVICE & PAINT RED
(HACR) TYPE CB'S
(L-OFF) PROVIDE HANDLE LOCK-OFF DEVICE
(FA) FIRE ALARM CB, PROVIDE HANDLE LOCK-ON DEVICE & PAINT RED
(LC) VIA LIGHTING CONTACTOR

NEW — ELECTRICAL PANEL SCHEDULE

PANEL: PANEL HP — 14KAIC FULLY RATED

Voltage : 480VY/277V, 3Ø , 4W
LOCATION:
MAINS: 200 Amp MCB
SURFACE — NEMA RATING : 1
BUS: 200 Amp CU

LOAD DESCRIPTION	SIZE COND	CU GRND	PHASE NEUT	CKT BRKR	CIR NO.	LOAD AMPS PHASE A	PHASE B	PHASE C	CIR NO.	CKT BRKR	PHASE NEUT	CU GRND	SIZE COND	LOAD DESCRIPTION
PANEL	1.5"	8	3	90	1	73.0				20	12	12	3/4"	CONTINUOUS LOAD
PANEL LP				3		14.4			2	3			#47	WATER HEATER
			3		3		73.0				12			
VIA 75KVA TRANSFORMER							14.4		4					
			3		5			73.0			12			
								14.4	6					
LIGHTING & EMERGENCY LIGHTING	3/4"	12	12	20	7	7.1				20				SPARE
TENANT				EM/L-ON/LC		0.0			8					
MECH (LARGEST)	3/4"	10	10	30	9		20.0			15	12	12	3/4"	MECH
RTU-1				3			9.0		10	3				HP-2
			10		11			20.0			12			
EXISTING ROOF TOP UNIT								9.0	12					3 TON
			10		13	20.0					12			
5 TON				HACR		9.0			14	HACR				
SPARE				20	15		0.0			20				SPARE
							0.0		16					
SPARE				20	17			0.0		20				SPARE
								0.0	18					
BUSSED SPACE					19	0.0								BUSSED SPACE
						0.0			20					
BUSSED SPACE					21		0.0							BUSSED SPACE
							0.0		22					
BUSSED SPACE					23			0.0						BUSSED SPACE
								0.0	24					
BUSSED SPACE					25	0.0								BUSSED SPACE
						0.0			26					
BUSSED SPACE					27		0.0							BUSSED SPACE
							0.0		28					
BUSSED SPACE					29			0.0						BUSSED SPACE
								0.0	30					
BUSSED SPACE					31	0.0								BUSSED SPACE
						0.0			32					
BUSSED SPACE					33		0.0							BUSSED SPACE
							0.0		34					
BUSSED SPACE					35			0.0						BUSSED SPACE
								0.0	36					
BUSSED SPACE					37	0.0								BUSSED SPACE
						0.0			38					
BUSSED SPACE					39		0.0							BUSSED SPACE
							0.0		40					
BUSSED SPACE					41			0.0						BUSSED SPACE
								0.0	42					
AMPS PER PHASE (CONNECTED LOAD)						123.6	116.5	116.5						

LIGHTING	1962.0
25% OF LIGHTING	490.5
MECH (LARGEST) @ 1.25%	20775.0
MECHANICAL	7479.0
PANEL LP	60702.0
CONTINUOUS LOAD @ 1.25%	15000.0
TOTAL CODE VA	106408.5

106.4 KW @ 480V, 3Ø
128.0 Amps @ 480V, 3Ø (CODE LOAD)

SYMBOL LIST
(HACR) TYPE CB'S
(LC) VIA LIGHTING CONTACTOR
(L-ON) PROVIDE LOCK ON DEVICE
(EM) UNIT EQUIP. PROVIDE UN-SWITCHED HOTLEG TO BATT/CHR.

LOAD CALCULATION

PANEL 'HP'

LIGHTING	1962.0
25% OF LIGHTING	490.5
MECH (LARGEST) @ 1.25%	20775.0
MECHANICAL	7479.0
PANEL LP	60702.0
CONTINUOUS LOAD @ 1.25%	15000.0
TOTAL CODE VA	106408.5

277 — 106.4 KW @ 480V, 3Ø
128.0 Amps 480V, 3Ø

LOAD CALCULATION FOR CONNECTION TO LANDLORD SERVICE BUS

3 PHASE CODE LOAD

LIGHTING	1962.0
25% OF LIGHTING	490.5
MECH (LARGEST) @ 1.25%	20775.0
MECHANICAL	7479.0
PANEL LP	60702.0
CONTINUOUS LOAD @ 1.25%	15000.0
TOTAL CODE VA	106408.5

277 — 106.4 KW @ 480V, 3Ø
128.0 Amps 480V, 3Ø INDICATES CALCULATED CODE LOAD

EXISTING / FUTURE 3 PHASE CODE LOAD TAKEN FROM SHELL DRAWINGS DATED :

ALL EXISTING PANELS HAVE EXISTING CIRCUIT BREAKERS, UTILIZE EXISTING CIRCUIT BREAKERS IF CIRCUIT BREAKER CONDITION IS IN GOOD WORKING ORDER (TEST IF NEEDED) OR PROVIDE NEW CIRCUIT BREAKERS AS NEEDED TO MATCH EXISTING PANEL MANUFACTURERS SPECIFICATIONS, AND CIRCUIT BEAKER'S SIZE, NUMBER OF POLES, AIC RATING AND ACCESSORIES AS NOTED .

NOTE: EVERY CIRCUIT AND MODIFICATION SHALL BE LEGIBLY IDENTIFIED AS TO ITS CLEAR, EVIDENT, AND SPECIFIC PURPOSE OR USE. THE IDENTIFICATION SHALL INCLUDE SUFFICIENT DETAIL TO ALLOW EACH CIRCUIT TO BE DISTINGUISHED FROM OTHERS. SPARE POSITIONS THAT CONTAIN UNUSED OVERCURRENT DEVICES OR SWITCHES SHALL BE DESCRIBED ACCORDINGLY. THE IDENTIFICATION SHALL BE INCLUDED IN A CIRCUIT DIRECTORY THAT IS LOCATED ON THE FACE OR INSIDE OF THE PANEL DOOR IN THE CASE OF A PANELBOARD, AND LOCATED AT EACH SWITCH ON A SWITCHBOARD. NO CIRCUIT SHALL BE DESCRIBED IN A MANNER THAT DEPENDS ON TRANSIENT CONDITIONS OF OCCUPANCY. –NEC 408.4.

FRANCHISEE: _____ _____
SIGNATURE DATE

AD: _____ _____
SIGNATURE DATE

NOTE: ELECTRICAL CONTRACTOR SHALL TRACE ALL EXISTING BRANCH CIRCUITS IN AREA OF RENOVATION AND MARK EXISTING PANELS WITH AREAS BEING SERVED. DISCONNECT AND REMOVE ALL BRANCH CIRCUITS & WIRING SERVING AREA OF RENOVATION AT EXISTING PANEL AND ABANDON CONDUIT ABOVE CEILING. REFER TO ARCHITECTURAL DRAWINGS, PANEL SCHEDULES AND ONE–LINE DIAGRAM FOR ADDITIONAL INFORMATION. PROVIDE A NEW TYPE WRITTEN PANEL SCHEDULE INDICATING ALL BRANCH CIRCUITS AND ATTACH TO PANEL COVER (REPAINT OVER ANY EXISTING MARKINGS). (TYPICAL FOR EACH PANEL)

Design Management Solutions LLC

THESE DRAWINGS AND ASSOCIATED DOCUMENTATION CONTAIN INFORMATION, DESIGNS, CONCEPTS, AND DATA THAT ARE PROPRIETARY TO DESIGN MANAGEMENT SOLUTIONS LLC. THIS INFORMATION MAY NOT BE USED FOR ANY PURPOSE OTHER THAN ORIGINALLY INTENDED WITHOUT THE EXPRESSED WRITTEN CONSENT OF THE OWNER AND DESIGNER OF DESIGN MANAGEMENT SOLUTIONS LLC.

DMS#E0525
016–164
DFT: RSM
DSN:RSM
CHK:GL

© THIS DRAWING IS AN INSTRUMENT OF SERVICE AND THE PROPERTY OF BAR NAPKIN LLC. THIS DRAWING MAY NOT BE REPRODUCED OR UTILIZED IN ANY MANNER WITHOUT THEIR WRITTEN PERMISSION.

bnp
bar napkin productions

2828 n central avenue
suite 1300
phoenix, az 85004
602 . 492 . 9494
www.bnp-llc.com

GREAT STEAK SURF CITY SQUEEZE
STORE 7621 1946

PROJECT LOCATION
11800 WEST BROAD ST.
SUITE 2116
RICHMOND, VA 23233

	ISSUE DATE
CITY SUBMITTAL	07.29.16

BN1309

E2 PANEL SCHEDULES

COM*check* Software Version 4.0.3.1

Interior Lighting Compliance Certificate

Project Information

Energy Code: 2012 IECC
Project Title:
Project Type: New Construction

Construction Site: Owner/Agent: Designer/Contractor:

Additional Efficiency Package

Unspecified

Allowed Interior Lighting Power

A Area Category	B Floor Area (ft2)	C Allowed Watts / ft2	D Allowed Watts (B X C)
1-GS-SCS (Dining: cafeteria/fast food)	1402	1.39	1963
		Total Allowed Watts =	1963

Proposed Interior Lighting Power

A Fixture ID : Description / Lamp / Wattage Per Lamp / Ballast	B Lamps/ Fixture	C # of Fixtures	D Fixture Watt.	E (C X D)
1-GS-SCS (Dining: cafeteria/fast food)				
LED 1: LI: DOWN LIGHT: LED Panel 44W:	1	18	44	792
LED 2: L2: 2X4 LAYIN: LED Panel 44W:	1	4	90	360
LED 2 copy 1: L4: 2X4 LAYIN: LED Panel 70W:	1	9	90	810
		Total Proposed Watts =		1962

Interior Lighting PASSES: Design 0.1% better than code

Interior Lighting Compliance Statement

Compliance Statement: The proposed interior lighting design represented in this document is consistent with the building plans, specifications, and other calculations submitted with this permit application. The proposed interior lighting systems have been designed to meet the 2012 IECC requirements in COM*check* Version 4.0.3.1 and to comply with the mandatory requirements listed in the Inspection Checklist.

Robert Mauskapf - Designer — Robert Mauskapf — 8/9/2016
Name - Title — Signature — Date

Project Title: Report date: 08/09/16
Data filename: H:\DMS\E0525\FIXTURES\E0525 COMCHECK.cck Page 1 of 6

COM*check* Software Version 4.0.3.1

Inspection Checklist

Energy Code: 2012 IECC

Requirements: 0.0% were addressed directly in the COM*check* software

Text in the "Comments/Assumptions" column is provided by the user in the COMcheck Requirements screen. For each requirement, the user certifies that a code requirement will be met and how that is documented, or that an exception is being claimed. Where compliance is itemized in a separate table, a reference to that table is provided.

Section # & Req.ID	Plan Review	Complies?	Comments/Assumptions
C103.2 [PR4][1]	Plans, specifications, and/or calculations provide all information with which compliance can be determined for the interior lighting and electrical systems and equipment and document where exceptions to the standard are claimed. Information provided should include interior lighting power calculations, wattage of bulbs and ballasts, transformers and control devices.	☐Complies ☐Does Not ☐Not Observable ☐Not Applicable	
C406 [PR9][1]	Plans, specifications, and/or calculations provide all information with which compliance can be determined for the additional energy efficiency package options.	☐Complies ☐Does Not ☐Not Observable ☐Not Applicable	

Additional Comments/Assumptions:

1 High Impact (Tier 1) 2 Medium Impact (Tier 2) 3 Low Impact (Tier 3)

Project Title: Report date: 08/09/16
Data filename: H:\DMS\E0525\FIXTURES\E0525 COMCHECK.cck Page 2 of 6

Section # & Req.ID	Rough-In Electrical Inspection	Complies?	Comments/Assumptions
C405.2.2.1 [EL22][1]	Automatic controls to shut off all building lighting installed in all buildings.	☐Complies ☐Does Not ☐Not Observable ☐Not Applicable	
C405.2.1.1 [EL23][1]	Independent lighting controls installed per approved lighting plans and all manual controls readily accessible and visible to occupants.	☐Complies ☐Does Not ☐Not Observable ☐Not Applicable	
C405.2.1.2 [EL15][1]	Lighting controls installed to uniformly reduce the lighting load by at least 50%.	☐Complies ☐Does Not ☐Not Observable ☐Not Applicable	
C405.2.2.3 [EL16][1]	Daylight zones provided with individual controls that control the lights independent of general area lighting.	☐Complies ☐Does Not ☐Not Observable ☐Not Applicable	
C405.2.3 [EL17][1]	Sleeping units have at least one master switch at the main entry door that controls wired luminaires and switched receptacles.	☐Complies ☐Does Not ☐Not Observable ☐Not Applicable	
C405.2.2.2 [EL18][1]	Occupancy sensors installed in required spaces.	☐Complies ☐Does Not ☐Not Observable ☐Not Applicable	
C405.2.2.3 [EL20][1]	Primary sidelighted areas are equipped with required lighting controls.	☐Complies ☐Does Not ☐Not Observable ☐Not Applicable	
C405.2.2.3 [EL21][1]	Enclosed spaces with daylight area under skylights and rooftop monitors are equipped with required lighting controls.	☐Complies ☐Does Not ☐Not Observable ☐Not Applicable	
C405.2.3 [EL4][1]	Separate lighting control devices for specific uses installed per approved lighting plans.	☐Complies ☐Does Not ☐Not Observable ☐Not Applicable	
C405.3 [EL19][1]	Fluorescent luminaires with odd numbered lamp configurations that are within 10 feet center to center (if recess mounted) or are within 1 foot edge to edge (if pendant or surface mounted) shall be tandem wired.	☐Complies ☐Does Not ☐Not Observable ☐Not Applicable	
C405.4 [EL6][1]	Exit signs do not exceed 5 watts per face.	☐Complies ☐Does Not ☐Not Observable ☐Not Applicable	
C405.2.3 [EL8][1]	Additional interior lighting power allowed for special functions per the approved lighting plans and is automatically controlled and separated from general lighting.	☐Complies ☐Does Not ☐Not Observable ☐Not Applicable	

Additional Comments/Assumptions:

1 High Impact (Tier 1) 2 Medium Impact (Tier 2) 3 Low Impact (Tier 3)

Project Title: Report date: 08/09/16
Data filename: H:\DMS\E0525\FIXTURES\E0525 COMCHECK.cck Page 3 of 6

Section # & Req.ID	Final Inspection	Complies?	Comments/Assumptions
C408.2.5.1 [FI16][1]	Furnished as-built drawings for electric power systems within 30 days of system acceptance.	☐Complies ☐Does Not ☐Not Observable ☐Not Applicable	
C303.3, C408.2.5.2 [FI17][1]	Furnished O&M instructions for systems and equipment to the building owner or designated representative.	☐Complies ☐Does Not ☐Not Observable ☐Not Applicable	
C405.5.2 [FI18][1]	Interior installed lamp and fixture lighting power is consistent with what is shown on the approved lighting plans, demonstrating proposed watts are less than or equal to allowed watts.	☐Complies ☐Does Not ☐Not Observable ☐Not Applicable	*See the Interior Lighting fixture schedule for values.*
C408.3 [FI33][1]	Lighting systems have been tested to ensure proper calibration, adjustment, programming, and operation.	☐Complies ☐Does Not ☐Not Observable ☐Not Applicable	
C406 [FI34][1]	Efficient HVAC performance, efficient lighting system, or on-site supply of renewable energy consistent with what is shown the approved plans.	☐Complies ☐Does Not ☐Not Observable ☐Not Applicable	

Additional Comments/Assumptions:

1 High Impact (Tier 1) 2 Medium Impact (Tier 2) 3 Low Impact (Tier 3)

Project Title: Report date: 08/09/16
Data filename: H:\DMS\E0525\FIXTURES\E0525 COMCHECK.cck Page 5 of 6

FRANCHISEE: _____ _____
SIGNATURE DATE

AD: _____ _____
SIGNATURE DATE

LUMINAIRE SCHEDULE

TAG MARK	MANUFACTURER	CATALOG NUMBER	LAMP #	LAMP TYPE	VOLTS	INPUT WATTS, VA	MOUNTING	LUMINAIRE DESCRIPTION
L1	MANUFACTURER: LSI INDUSTRIES	PART NUMBER: 516853S 6" LED DOWN LIGHT WITH WHITE TRIM - WARM WHITE.	18	LED INCLUDED	277V	44 WATTS	RECESSED IN LAY-IN GRID	6-Inch Wide Beam Downlight RECESSED L.E.D. DOWNLIGHT.
L2	MANUFACTURER: LSI INDUSTRIES	PART NUMBER: 521840 DECORATIVE CENTER BASKET TROFFER - WARM WHITE.	4	LED INCLUDED	277V	90 WATTS	RECESSED IN LAY-IN GRID	2'x4' FLOURESCENT LIGHT W/ PRISMATIC LENS.
L4	MANUFACTURER: LSI INDUSTRIES	MANUFACTURER: LSI INDUSTRIES PART NUMBER: 566763 LIGHT NEUTRAL WHITE.	9	LED INCLUDED	277V	80 WATTS	RECESSED IN LAY-IN GRID	2'x4' FLOURESCENT LIGHT W/ PRISMATIC LENS.
L6	MANUFACTURER: LSI INDUSTRIES	DECRIPTION: EMERGENCY LIGHTING UNIT IN BLACK HOUSING CATALOG ORDER: 74168	3	LED INCLUDED	277V	44 WATTS	WALL MOUNTED	BUGEYE EMERGENCY WALL LIGHT W/ 90 MINUTE BATTERY BACK-UP WHERE NOTED 'EM'
X	COOPER LIGHTING - SURE-LITES®	ES SERIES EDGELIT EXITS LED LAMPS	4	LED INCLUDED	277V	4 WATTS	SURFACE WALL OR CEILING	CEILING-MOUNT EXIT SIGN TO MATCH BLDG. STANDARD ("W" = WALL-MOUNTED). SURFACE-MOUNT GREEN EDGE LIT GLASS - TYP.

Coordinate <u>all</u> fixture options with Architect prior to order. All interior lighting on dimmer or driver control, coordinate dimmer and switch control as needed. ALL LIGHTING COLOR TO BE WARM WHITE

LUMINAIRE NOTES

1	THE FIXTURE SCHEDULE INDICATES GENERAL DESCRIPTION OF LIGHTING FIXTURES AND MANUFACTURERS CATALOG NUMBERS IT SHALL BE THE CONTRACTORS RESPONSIBILITY TO DETERMINE THE CORRECT CEILING CONFIGURATION AND PROVIDE THE FIXTURES WITH ALL NECESSARY TRIMS AND MOUNTING HARDWARE SO THAT BOTH THE CEILING SYSTEM AND THE FIXTURE CONSTRUCTION MATCHES.
2	IT SHALL BE CONTRACTORS RESPONSIBILITY TO VERIFY EXACT LOCATION OF ALL LIGHTING FIXTURES AND TYPE OF CEILINGS WITH ARCHITECTURAL REFLECTED CEILING PLANS AND ELEVATIONS PRIOR TO ANY WORK.
3	A JUNCTION BOX MUST BE PROVIDED WITH ALL EXIT LIGHTS CONNECTED TO MORE THAN ONE SET OF CONDUCTORS UNLESS THE EXIT LIGHT FIXTURE IS FURNISHED WITH AN APPROVED OUTLET BOX FOR THROUGH WIRING.
4	IT SHALL BE THE CONTRACTORS RESPONSIBILITY TO COORDINATE THE FINAL LOCATION OF LIGHTING FIXTURES IN MECHANICAL ELECTRICAL AND OTHER EQUIPMENT ROOMS WHERE CONDUITS, DUCT WORK, PIPING, ETC., ARE PRESENT TO AVOID CONFLICT AND ENABLE PROPER ILLUMINATION DISTRIBUTION. (REQUIRES DESIGNER APPROVAL)
5	ALL FLUORESCENT LIGHTING FIXTURES MUST BE EQUIPPED WITH ELECTRONIC BALLASTS.
6	NO SUBSTITUTIONS SHALL BE APPROVED WITHOUT WRITTEN PERMISSION FROM THE ARCHITECT, ENGINEER OR THE CITY.
7	FLUORESCENT FIXTURES THAT UTILIZE DOUBLE-ENDED LAMPS AND CONTAIN BALLAST(S) THAT CAN BE SERVICED IN PLACE OR BALLASTED LUMINARIES THAT ARE SUPPLIED FROM MULTIWIRE BRANCH CIRCUITS AND CONTAIN BALLAST(S) THAT CAN BE SERVICED IN PLACE SHALL HAVE A DISCONNECTING EITHER INTERNAL OR EXTERNAL TO EACH LUMINAIRE (FIXTURE), TO DISCONNECT SIMULTANEOUSLY FROM THE SOURCE OF SUPPLY ALL CONDUCTORS OF THE BALLAST, INCLUDING THE GROUNDED CONDUCTOR IF ANY PER NEC ARTICLE 410.73(G).
8	ALL EMERGENCY LIGHTING FIXTURES SHALL BE PROVIDED WITH 90 MINUTES OF BATTERY BACK. ALL T5, T8 AND T12 LAMP FIXTURES SHALL HAVE A MINIMUM 1100 LUMEN OUTPUT OPERATION IN THE EMERGENCY MODE. EXTEND AN UNSWITCHED LOCAL LIGHTING BRANCH CIRCUIT TO ALL UNIT EQUIPMENT AND ALL FLUORESCENT EM LIGHTS LABELED AS "NL". ALL OTHER LIGHT FIXTURES SHALL OPERATE WITH LOCAL ROOM SWITCHING AND UPON LOSS OF POWER WILL OPERATE LAMPS ON BATTERY BACKUP.
9	ALL EXIT SIGNS SHALL BE PROVIDED WITH EMERGENCY MAINTENANCE FREE NICKEL CADMIUM BATTERY AND SOLID STATE CHARGING SYSTEM UNLESS SPECIFICALLED INDICATED ON THE PLANS TO BE CONNECTED TO A "LIFE SAFETY" CIRCUIT ON GENERATOR BACKUP POWER.

Design Management Solutions LLC

THESE DRAWINGS AND ASSOCIATED DOCUMENTS, CONCEPTS, AND DATA THAT ARE THE SOLE PROPERTY OF DESIGN MANAGEMENT SOLUTIONS LLC. THE INFORMATION MAY NOT BE USED FOR ANY PURPOSE OTHER THAN THE QUALIFY PROJECT WITHOUT THE EXPRESSED WRITTEN CONSENT AND PERMISSION OF THE ENGINEER AND DESIGN MANAGEMENT SOLUTIONS LLC.

DMS#E0525 016-164
DFT: RSM
DSN:RSM
CHK:GL

© THIS DRAWING IS AN INSTRUMENT OF SERVICE AND THE PROPERTY OF BAR NAPKIN LLC. THIS DRAWING MAY NOT BE REPRODUCED OR UTILIZED IN ANY MANNER WITHOUT THEIR WRITTEN PERMISSION.

bnp
bar napkin productions

2828 n central avenue
suite 1300
phoenix, az 85004
602 . 492 . 9494
www.bnp-llc.com

GREAT STEAK SURF CITY SQUEEZE
STORE 7621 1946

PROJECT LOCATION
11800 WEST BROAD ST.
SUITE 2116
RICHMOND, VA 23233

	ISSUE DATE
CITY SUBMITTAL	07.29.16

BN1309

E2.1 COMCHECK, LIGHTING SCHEDULE

PLAN NORTH

LIGHTING PLAN

SCALE: 1/4" = 1'-0"

GENERAL NOTES

1. ALL ITEMS SUCH AS LIGHT SWITCHES AND OTHER ITEMS TO BE LOCATED AS CLOSE AS POSSIBLE TO THE ADJACENT DOOR FRAME.

2. CONDUIT SHALL BE INSTALLED A MINIMUM OF 1.5" BELOW UNDERSIDE OF ROOF DECK, PER NEC

3. SEE ARCHITECTURAL PLANS FOR MOUNTING HEIGHTS AND EXACT LOCATION OF ALL LIGHTING FIXTURES. TYPICAL.

4. LOW VOLTAGE LOCATIONS TO BE VERIFIED WITH OWNER PRIOR TO INSTALLATION.

5. ELECTRICAL CONTRACTOR SHALL TRACE ALL EXISTING BRANCH CIRCUITS IN AREA OF RENOVATION AND MARK EXISTING PANELS WITH AREAS BEING SERVED. DISCONNECT AND REMOVE ALL BRANCH CIRCUITS & WIRING SERVING AREA OF RENOVATION AT EXISTING PANEL AND ABANDON CONDUIT ABOVE CEILING. REFER TO ARCHITECTURAL DRAWINGS, PANEL SCHEDULES AND ONE-LINE DIAGRAM FOR ADDITIONAL INFORMATION.

6. OCCUPANCY SENSORS AUTOMATICALLY TURN OFF LIGHTING IN UNOCCUPIED SPACES, PROVIDE ULTRASONIC TYPE SENSORS AS MANUFACTURED BY NOVITAS, OR EQUAL.

KEYED NOTES

1. ALL FIXTURES DESIGNATED AS 'EM' ARE CONNECTED TO THE LOCAL NORMAL LIGHTING CIRCUIT (AS NOTED) AND SHALL HAVE A 1400 LUMEN BATTERY BACK-UP WITH A SEPARATE UNSWITCHED CONDUCTOR RUN TO BATTERY SO THAT THE FIXTURE CAN BE SWITCHED OFF WHILE STILL MAINTAINING POWER TO BATTERY.
2. PROVIDE AN UNSWITCHED HOT WIRE FOR ALL EXIT SIGNS, WIRE "HOT".
3. THIS FIXTURE IS TO BE CONTROLLED BY SWITCH 'NL' AND SHALL SERVE AS A NIGHT LIGHT (NL).
4. LIGHT SWITCH LOCATIONS SHALL BE COORDINATED WITH ARCHITECT PRIOR TO INSTALLATION. INSTALL LIGHTING SWITCHES TOGETHER TO FORM A SWITCH BANK. LABEL SWITCHES WITH ENGRAVED PLATE TO IDENTIFY LIGHTING CONTROL (TYPICAL UNO). COORDINATE DIMMING SWITCHES WITH RESPECTIVE DIMMING BALLASTS.
5. EXISTING EXTERIOR LIGHTING TO REMAIN UNCHANGED, AND IS SHOWN FOR REFERENCE ONLY (INDICATED BY 'EX'). EXTERIOR REGULAR AND EMERGENCY LIGHTING IS SUPPLIED BY THE LANDLORD.
6. PROVIDE SEPARATE DAYLIGHT CONTROL FOR ALL LIGHTING FIXTURES THAT ARE IN THE DAYLIGHT ZONE, PER 130.1(d)2A & 130.1(d)2D.
   *LIGHTING CONTROL ACCEPTANCE REQUIREMENTS PER 130.4. A CERTIFICATE OF ACCEPTANCE SHALL BE SUBMITTED TO THE ENFORCEMENT AGENCY UNDER SECTION 10-103(a) OF PART 1 FOR:
   A. AUTOMATIC DAYLIGHT CONTROLS
   B. LIGHTING CONTROLS
   C. DEMAND RESPONSIVE CONTROLS
   PROVIDE LEVITON DAYLIGHT HARVESTING SOLUTION: INTEGRATED ROOM CONTROL (IRC) OR EQUAL. COORDINATE ALL COMPONENTS WITH MANUFACTURER FOR A COMPLETE SYSTEM.

PLEASE COORDINATE THE EXACT EXIT SIGN LOCATION/PLACEMENT WITH THE CITY OF RICHMOND'S FIELD BUILDING INSPECTOR PRIOR TO ROUGH INSPECTION APPROVAL.

FRANCHISEE: _____ _____
SIGNATURE DATE

AD: _____ _____
SIGNATURE DATE

07.29.2016 12:45:39 PM - C:\Backup\Dropbox\DMS Dropbox Projects\016-164 Surf City Squeeze GREAT STEAK Virginia\DMS CDs\E0525_Surf City Squeeze Virginia_T1.dwg - Sum

Design Management Solutions LLC

THESE DRAWINGS AND ASSOCIATED DOCUMENTATION CONTAIN INFORMATION, DATA AND DESIGNS THAT ARE THE SOLE PROPERTY OF DESIGN MANAGEMENT SOLUTIONS LLC. THIS INFORMATION MAY NOT BE USED FOR ANY PURPOSE OTHER THAN THE PROJECT REFERRED TO HEREIN WITHOUT THE EXPRESS WRITTEN CONSENT AND PERMISSION OF THE ENGINEER AND DESIGN MANAGEMENT SOLUTIONS LLC.

DMS#E0525.016-164
DFT: RSM
DSN: RSM
CHK: GL

© THIS DRAWING IS AN INSTRUMENT OF SERVICE AND THE PROPERTY OF BAR NAPKIN LLC. THIS DRAWING MAY NOT BE REPRODUCED OR UTILIZED IN ANY MANNER WITHOUT THEIR WRITTEN PERMISSION.

bar napkin productions
2828 n central avenue
suite 1300
phoenix, az 85004
602 . 492 . 9494
www.bnp-llc.com

GREAT STEAK SURF CITY SQUEEZE

STORE 7621 1946

PROJECT LOCATION

11800 WEST BROAD ST.
SUITE 2116
RICHMOND, VA 23233

	ISSUE DATE
CITY SUBMITTAL	07.29.16

BN1309

E3 LIGHTING PLAN

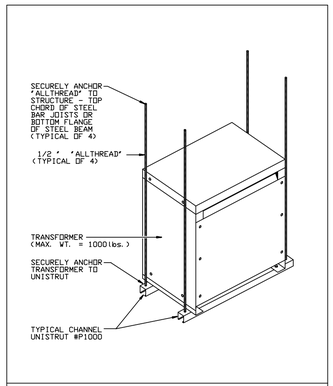

SUSPENDED TRANSFORMER

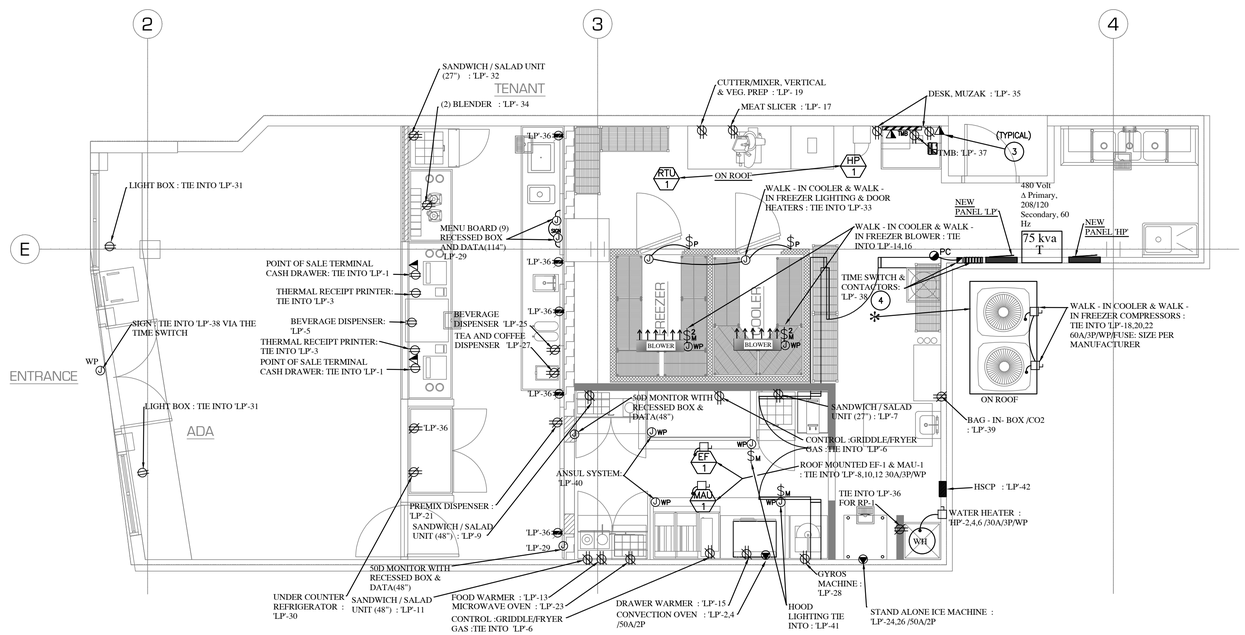

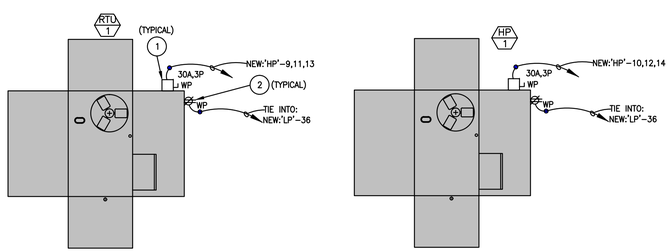

PLAN NORTH

PARTIAL ROOF PLAN

SCALE: 1/4" = 1'-0"

PLAN NORTH

POWER PLAN

SCALE: 1/4" = 1'-0"

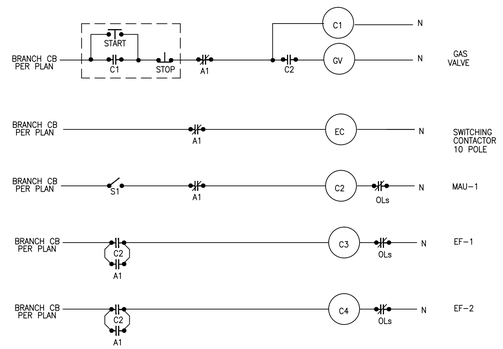

GV: GAS VALVE SOLENOID OPERATOR.

C1: STOP/START STATION SEAL-IN RELAY COIL AND ASSOCIATED CONTACTS.

C2/C3/C4: COMBINATION STARTER COILS AND AUXILIARY CONTACTS CONNECTED AS INDICATED.

EC: OPERATING COIL FOR MULTIPOLE CONTACTOR SWITCHING UNDER-HOOD ELECTRICAL EQUIPMENT. SEE PLAN FOR NUMBER OF POLES AND SPECIFIC CIRCUITS TO BE SWITCHED.

S1: MANUAL MOTOR STARTER, WITHOUT OVERLOADS, WITH (1) RED "ON" INDICATING LAMP, IN A FLUSH-MOUNT BOX WITH STAINLESS STEEL FACEPLATE (SIMILAR TO GENERAL ELECTRIC CATALOG # CR1062R2BBT502).

A1: HOOD FIRE SUPPRESSION SYSTEM NORMALLY-OPEN OR NORMALLY-CLOSED CONTACT FOR SMOKE CONTROL OPERATION OF THE EXHAUST FANS AND SHUT DOWN OF GAS VALVE.

HOOD SYSTEM CONTROL DIAGRAM

NOTE: ELECTRICAL CONTRACTOR TO PROVIDE ALL EQUIPMENT NECESSARY FOR A FULLY FUNCTIONING HOOD INTERLOCK SYSTEM. COORDINATE WITH ALL VENDORS FOR EXACT REQUIREMENTS.

FRANCHISEE: _____ _____

SIGNATURE DATE

AD: _____ _____

SIGNATURE DATE

GENERAL NOTES

1. ALL ITEMS SUCH AS LIGHT SWITCHES AND OTHER ITEMS TO BE LOCATED AS CLOSE AS POSSIBLE TO THE ADJACENT DOOR FRAME.

2. CONDUIT SHALL BE INSTALLED A MINIMUM OF 1.5" BELOW UNDERSIDE OF ROOF DECK, PER NEC

3. SEE ARCHITECTURAL PLANS FOR MOUNTING HEIGHTS AND EXACT LOCATION OF ALL LIGHTING FIXTURES. TYPICAL.

4. LOW VOLTAGE LOCATIONS TO BE VERIFIED WITH OWNER PRIOR TO INSTALLATION.

5. ELECTRICAL CONTRACTOR SHALL TRACE ALL EXISTING BRANCH CIRCUITS IN AREA OF RENOVATION AND MARK EXISTING PANELS WITH AREAS BEING SERVED. DISCONNECT AND REMOVE ALL BRANCH CIRCUITS & WIRING SERVING AREA OF RENOVATION AT EXISTING PANEL AND ABANDON CONDUIT ABOVE CEILING. REFER TO ARCHITECTURAL DRAWINGS, PANEL SCHEDULES AND ONE-LINE DIAGRAM FOR ADDITIONAL INFORMATION.

6. OCCUPANCY SENSORS AUTOMATICALLY TURN OFF LIGHTING IN UNOCCUPIED SPACES, PROVIDE ULTRASONIC TYPE SENSORS AS MANUFACTURED BY NOVITAS, OR EQUAL.

KEYED NOTES

1. NEW ROOF MOUNTED PACKAGED HEAT PUMP UNITS, HP-1 & HP-2 ARE 480V, 3 PHASE, 20.0 MCA, 30A MOCP. ELECTRICAL CONTRACTOR SHALL FURNISH AND INSTALL NEW 30A 3P, 250V N3R DISCONNECT SWITCH WITH CONDUIT & WIRE SIZE AS NOTED ON PANEL SCHEDULE TO NEW TENANT PANEL AND CONNECT AS SHOWN. FURNISH AND INSTALL NEW TIME DELAY FUSES SIZED PER MANUFACTURERS RECOMMENDATION. PROVIDE WP ROOF JACK TO BELOW ROOF. VERIFY UNIT MOCP WITH MECHANICAL PRIOR TO ORDERING DISCONNECT SWITCHES. LABEL DISCONNECT SWITCHES WITH WP ENGRAVED PLATE TO IDENTIFY PANEL AND BRANCH CIRCUIT (TYPICAL UNO).

2. NEW 20A, WATERPROOF 120V, GFCI PROTECTED DUPLEX RECEPTACLE ON ROOF, WITH WP ROOF JACK TO BELOW ROOF. CONNECT TO BRANCH CIRCUIT AS NOTED.

3. PROVIDE (4-11/16" SQ. X 2-1/8" DEEP) J-BOX WITH SINGLE-GANG MUD RING AND (3/4") CONDUIT WITH PULL WIRE STUBBED (3") INTO THE NEAREST ACCESSIBLE CEILING FOR TELEPHONE/FAX/DATA. TYP TO ALL TELEPHONE/FAX/DATA RECEPTACLES. UTILIZE EXISTING TMB FOR NEW TELEPHONE/FAX/DATA/ POWER RECEPTACLES.

4. PROVIDE 20A, 2 CIRCUIT, 120V TIME SWITCH WITH ASTRONOMIC DIAL, 2 HOUR OVERRIDE, 4 HOUR BACKUP BATTERY, AND HOLIDAY PROGRAM. CONNECT TO TENANT EXTERIOR SIGN CIRCUIT, AND INTERIOR LIGHTING CIRCUIT, FIELD VERIFY MOUNTING LOCATION PRIOR TO INSTALLATION ROUGH-IN.

5. PROVIDE SIGN LIGHTING WP JUNCTION BOX (SEE ARCHITECTURAL DRAWINGS FOR EXACT LOCATION) EXTEND 3/4" CONDUIT TO ROOF STRUCTURE WITHIN BUILDING AND CONNECT TO TENANT PANEL AS NOTED VIA TIME SWITCH.

KITCHEN NOTES

1. ALL WIRING TERMINATING IN J-BOXES, OUTLETS, OR OTHER DEVICES TO BE CLEARLY TAGGED SHOWING EQUIPMENT NAME, VOLTAGE, AND LOAD.

2. SEAL PENETRATIONS ENTERING AND LEAVING WALK-IN COOLERS AND FREEZERS PER N.E.C. #300-7 OR AS REQUIRED BY EQUIPMENT SUPPLIER.

3. ELECTRICAL CONTRACTOR TO SUPPLY AND INSTALL ALL REQUIRED WIRING BETWEEN EQUIPMENT AND STUB-INS INTER LOCK TO OPERATE IN CONJUNCTION WITH THE FIRE PROTECTION SYSTEM IN ACCORDANCE WITH ALL PERTAINING CODES AND REGULATIONS.

4. ELECTRICAL CONTRACTOR SHALL PROVIDE 3/4" C. FROM COMPRESSOR TO BLOWER COIL UNLESS NOTED OTHERWISE WITH CONTROL WIRING. INTERLOCKING OPERATION FOR FREEZER AND COOLERS TO BE INSTALLED AND CONNECTED BY KITCHEN EQUIPMENT SUPPLIER.

5. ELECTRICAL CONTRACTOR TO PROVIDE INTERLOCK BETWEEN HOOD FANS AND MAKE-UP AIR SYSTEM.

6. ELECTRICAL CONTRACTOR SHALL PROVIDE GFCI TYPE RECEPTACLES IN KITCHEN AREAS PER NEC 210-8(B)(2), AND READILY ACCESSIBLE PER NEC 210-8.

7. VERIFY ALL FINAL TRIM REQUIREMENT WITH EQUIPMENT SUPPLIER/CONTRACTOR PRIOR TO FINAL TRIMOUT.

8. ALL DISCONNECT SWITCHES OR MANUAL SWITCHES, ETC. SHALL HAVE STAINLESS STEEL ENCLOSURES AND BE NEMA 4 RATED IN THE KITCHEN.

9. ALL FLEXIBLE CONDUIT USED FOR STUB-UPS OR FINAL CONNECTIONS SHALL BE LIQUID-TIGHT WITH APPROPRIATE FLEX CONNECTIONS.

10. ALL RECEPTACLES IN KITCHEN SHALL HAVE STAINLESS STEEL FACE.

11. PROVIDE ALL LINE SWITCHES, SAFETY CUT-OUTS, CONTROL PANELS, CONTACTORS, FUSE BOXES, AND OTHER RELATED ELECTRICAL CONTROLS, FITTINGS, AND CONNECTIONS UNLESS SPECIFICALLY CALLED FOR BY OTHERS.

12. ALL OUTLETS MOUNTED ON OR IN FABRICATED EQUIPMENT SHALL BE FURNISHED AND INSTALLED BY FOOD SERVICE CONTRACTORS.

13. FOOD SERVICE CONTRACTOR TO INSTALL AND INTERCONNECT ALL ELECTRICAL CONTROLS, SWITCHES, OR OTHER UNITS WHICH ARE SEPARATELY FURNISHED.

14. ALL WIRING FOR MECHANICAL EQUIPMENT AND CONTROLS IS INCLUDED IN THE ELECTRICAL CONTRACTOR'S SCOPE. FINAL CONTROL CONNECTIONS ARE BY MECHANICAL CONTRACTOR.

bnp
bar napkin productions

2828 n central avenue
suite 1300
phoenix, az 85004
602 . 492 . 9494
www.bnp-llc.com

GREAT STEAK SURF CITY SQUEEZE

STORE 7621 1946

PROJECT LOCATION

11800 WEST BROAD ST.
SUITE 2116
RICHMOND, VA 23233

	ISSUE DATE
CITY SUBMITTAL	07.29.16

Design Management Solutions LLC

THESE DRAWINGS AND ASSOCIATED DOCUMENTATION CONTAIN INFORMATION, DESIGNS, CONCEPTS, AND DATA THAT ARE THE SOLE PROPERTY OF DESIGN MANAGEMENT SOLUTIONS LLC. THIS INFORMATION MAY NOT BE USED FOR ANY PURPOSE OTHER THAN ORIGINALLY INTENDED WITHOUT THE EXPRESSED WRITTEN CONSENT AND PERMISSION OF DESIGN MANAGEMENT SOLUTIONS LLC.

DMS#E0525 016-164
DFT: RSM
DSN: RSM
CHK: GL

BN1309

E4 POWER PLAN

© THIS DRAWING IS AN INSTRUMENT OF SERVICE AND THE PROPERTY OF BAR NAPKIN LLC. THIS DRAWING MAY NOT BE REPRODUCED OR UTILIZED IN ANY MANNER WITHOUT THEIR WRITTEN PERMISSION.

C:\ 29.07.16 12:49:39 PM - C:\ Backup\ Dropbox\ DMS Dropbox Projects\ 016-164 Surf City Squeeze GREAT STEAK Virginia\ DMS EQs\ E0525_Surf City Squeeze Virginia_TUeg - Sam

SECTION 16050 - BASIC ELECTRICAL MATERIALS AND METHODS

PART 1 – GENERAL
1.1 RELATED DOCUMENTS
A. Drawings and general provisions of the Contract, including General and Supplementary Conditions and all other sections of the Electrical Specifications apply to this section. This is typical for all sections of the Electrical Specifications.
1.2 SUBMITTALS
A. Product Data: For each type of product indicated herein.
1.3 QUALITY ASSURANCE
A. Electrical Components, Devices, and Accessories: Listed and labeled as defined in NFPA 70, Article 100, by a testing agency acceptable to authorities having jurisdiction, and marked for intended use. This requirement applies to all sections of the Electrical Specifications.
B. Comply with NFPA 70. This requirement applies to all sections of the Electrical Specifications.
1.4 COORDINATION
A. Coordinate chases, slots, inserts, sleeves, and openings with general construction work and arrange in building structure during progress of construction.
B. Coordinate electrical service connections to components furnished by utility companies.
PART 2 – PRODUCTS
2.1 SUPPORTING DEVICES
A. Material: Cold–formed steel, with corrosion–resistant coating acceptable to authorities having jurisdiction.
B. Metal Items for Use Outdoors or in Damp Locations: Hot–dip galvanized steel.
C. Slotted–Steel Channel Supports: Flange edges turned toward web.
D. Raceway and Cable Supports: Manufactured clevis hangers, riser clamps, straps, threaded C–clamps with retainers, ceiling trapeze hangers, wall brackets, and spring–steel clamps.
2.2 ELECTRICAL IDENTIFICATION
A. Identification Devices: A single type of identification product for each application category.
B. Colored Adhesive Marking Tape for Raceways, Wires, and Cables: Self–adhesive vinyl tape, not less than 1 inch wide by 3 mils thick (25 mm wide by 0.08 mm thick).
C. Underground Warning Tape: Permanent, bright–colored, continuous–printed, detectable premarked vinyl tape.
D. Tape Markers for Wire: Vinyl or vinyl–cloth, self–adhesive, wraparound type with preprinted numbers and letters.
E. Color–Coding Cable Ties: Type 6/6 nylon, self–locking type. Colors to suit coding scheme.
F. Engraved–Plastic Labels, Signs, and Instruction Plates: Engraving stock, melamine plastic laminate punched or drilled for mechanical fasteners 1/16–inch minimum thickness for signs up to 20 sq. in. and 1/8–inch minimum thickness for larger sizes.
PART 3 – EXECUTION
3.1 ELECTRICAL EQUIPMENT INSTALLATION
A. Headroom Maintenance: If mounting heights or other location criteria are not indicated, arrange and install components and equipment to provide the maximum possible headroom.
B. Materials and Components: Install level, plumb, and parallel and perpendicular to other building systems and components, unless otherwise indicated.
C. Equipment: Install to facilitate service, maintenance, and repair or replacement of components.
D. Right of Way: Give to raceways and piping systems installed at a required slope.
3.2 ELECTRICAL SUPPORTING DEVICE APPLICATION
A. Damp Locations and Outdoors: Hot–dip galvanized materials.
B. Dry Locations: Steel materials.
C. Support Clamps for PVC Raceways: Click–type clamp system.
D. Selection of Supports: Comply with manufacturer's written instructions.
E. Strength of Supports: Adequate to carry present and future loads, times a safety factor of at least four; minimum of 200–lb design load.
3.3 SUPPORT INSTALLATION
A. Install support devices to securely and permanently fasten and support electrical components.
B. Install individual and multiple raceway hangers and riser clamps to support raceways.
C. Support parallel runs of horizontal raceways together on trapeze– or bracket–type hangers.
D. Size supports for multiple raceway installations so capacity can be increased by 25 percent.
E. Support individual horizontal raceways with separate, malleable–iron pipe hangers or clamps.
F. Install 1/4–inch– diameter or larger threaded steel hanger rods, unless otherwise indicated.
G. Separately support cast boxes that are threaded to raceways and used for fixture support. Support sheet–metal boxes directly from the building structure or by bar hangers.
H. Install metal channel racks for mounting cabinets, panelboards, disconnect switches, control enclosures, pull and junction boxes, transformers, and other devices unless components are mounted directly to structural elements of adequate strength.
I. Install sleeves for cable and raceway penetrations of concrete slabs and walls unless core–drilled holes are used. Install sleeves for cable and raceway penetrations of masonry and fire–rated gypsum walls and of all other fire–rated floor and wall assemblies.
J. Securely fasten electrical items and their supports to the building structure, unless otherwise indicated. Fasten equipment with components suitable for the mounting surface. indicated:
3.4 IDENTIFICATION MATERIALS AND DEVICES
A. Install at locations for most convenient viewing without interference with operation and maintenance of equipment.
B. Coordinate names, abbreviations, colors, and other designations used for electrical identification with corresponding designations indicated in the Contract Documents.
C. Identify raceways and cables with color banding as follows:
1. Bands: Pretensioned, snap–around, colored plastic sleeves or colored adhesive marking tape. Make each color band 2 inches wide, completely encircling conduit.
2. Band Locations: At changes in direction, at penetrations of walls and floors, at 50–foot maximum intervals.
3. Colors: As follows:
a. Fire Alarm System: Red.
b. Security System: Blue and yellow.
c. Telecommunication System: Green and yellow.
D. Tag and label circuits designated to be extended in the future. Identify source and circuit numbers in each cabinet, pull and junction box, and outlet box.
E. Install continuous underground plastic markers during trench backfilling, for exterior underground power, control, signal, and communication lines located directly above power and communication lines. Locate 6 to 8 inches (150 to 200 mm) below finished grade. If width of multiple lines installed in a common trench or concrete envelope does not exceed 16 inches (400 mm), overall, use a single line marker.
F. Color–code secondary service, feeder, and branch–circuit conductors throughout the secondary electrical system as follows:

	208/120 V	480/277V
Phase A:	Black	Yellow
Phase B:	Red	Brown
Phase C:	Blue	Orange

G. Install warning, caution, and instruction signs where required to comply with 29 CFR, Chapter XVII, Part 1910.145.
H. Install engraved–laminated emergency–operating signs with white letters on red background with minimum 3/8–inch– high lettering for emergency instructions.
3.5 FIRESTOPPING
A. Apply firestopping to cable and raceway penetrations of fire–rated floor and wall assemblies to achieve fire–resistance rating of the assembly.
3.8 REFINISHING AND TOUCHUP PAINTING
A. Refinish and touch up paint.
1. Clean damaged and disturbed areas and apply primer, intermediate, and finish coats to suit the degree of damage at each location.
2. Repair damage to galvanized finishes with zinc–rich paint recommended by manufacturer.
3.9 CLEANING AND PROTECTION
A. Protect equipment and installations and maintain conditions to ensure that coatings, finishes, and cabinets are without damage or deterioration at time of Substantial Completion.
END OF SECTION

SECTION 16060 - GROUNDING AND BONDING

PART 1 – GENERAL
1.1 SUBMITTALS
A. Product Data: For each type of product indicated.
1.2 QUALITY ASSURANCE
A. Comply with NFPA 70 and UL 467.
PART 2 – PRODUCTS
2.1 MANUFACTURERS
A. Available Manufacturers: Subject to compliance with requirements, manufacturers offering products that may be incorporated into the Work include, but are not limited to, the following:
1. Grounding Conductors, Cables, Connectors, and Rods:
a. Chance/Hubbell.
b. Copperweld Corp.
c. Erico Inc.; Electrical Products Group.
2.2 GROUNDING CONDUCTORS
A. For insulated conductors, comply with Division 16 Section "Conductors and Cables."
B. Material: Copper.
C. Equipment Grounding Conductors: Insulated with green–colored insulation.
D. Isolated Ground Conductors: Insulated with green–colored insulation with yellow stripe. On feeders with isolated ground, use colored tape, alternating bands of green and yellow tape to provide a minimum of three bands of green and two bands of yellow.
E. Grounding Electrode Conductors: Stranded cable.
F. Underground Conductors: Bare, tinned, stranded, unless otherwise indicated.
G. Bare Copper Conductors: Comply with the following:
1. Solid Conductors: ASTM B 3.
2. Assembly of Stranded Conductors: ASTM B 8.
3. Tinned Conductors: ASTM B 33.
2.3 CONNECTOR PRODUCTS
A. Comply with IEEE 837 and UL 467; listed for use for specific types, sizes, and combinations of conductors and connected items.
B. Bolted Connectors: Bolted–pressure–type connectors, or compression type.
C. Welded Connectors: Exothermic–welded type, in kit form, and selected per manufacturer's written instructions.
PART 3 – EXECUTION
3.1 APPLICATION
A. Use only copper conductors for both insulated and bare grounding conductors in direct contact with earth, concrete, masonry, crushed stone, and similar materials.
B. In raceways, use insulated equipment grounding conductors.
C. Exothermic–Welded Connections: Use for connections to structural steel and for underground connections, except those at test wells.
D. Equipment Grounding Conductor Terminations: Use bolted pressure clamps.
3.2 EQUIPMENT GROUNDING CONDUCTORS
A. Comply with NFPA 70, Article 250, for types, sizes, and quantities of equipment grounding conductors, unless specific types, larger sizes, or more conductors than required by NFPA 70 are indicated.
B. Install equipment grounding conductors in all feeder and branch circuit conduits.
C. Air–Duct Equipment Circuits: Install an equipment grounding conductor to duct–mounted electrical devices operating at 120 V and more, including air cleaners and heaters. Bond conductor to each unit and to air duct.
D. Water Heater: Install a separate equipment grounding conductor to each electric water heater. Bond conductor to heater units, piping, connected equipment, and components.
E. Signal and Communication Systems: For telephone, alarm, voice and data, and other communication systems, provide No. 6 AWG minimum insulated grounding conductor in raceway from grounding electrode system to each service location, terminal cabinet, wiring closet, and central equipment location.
1. Service and Central Equipment Locations and Wiring Closets: Terminate grounding conductor on a 1/4–by–2–by–12–inch grounding bus.
3.3 INSTALLATION
A. Grounding Conductors: Route along shortest and straightest paths possible, unless otherwise indicated. Avoid obstructing access or placing conductors where they may be subjected to strain, impact, or damage.

SECTION 16060 - GROUNDING AND BONDING (CONTINUED)

3.4 CONNECTIONS
A. General: Make connections so galvanic action or electrolysis possibility is minimized. Select connectors, connection hardware, conductors, and connection methods so metals in direct contact will be galvanically compatible.
B. Equipment Grounding Conductor Terminations: For No. 8 AWG and larger, use pressure–type grounding lugs. No. 10 AWG and smaller grounding conductors may be terminated with winged pressure–type connectors.
END OF SECTION

SECTION 16120 - CONDUCTORS AND CABLES

PART 1 – GENERAL
1.1 QUALITY ASSURANCE
A. Listing and Labeling: Provide wires and cables specified in this Section that are listed and labeled.
1. The Terms "Listed" and "Labeled": As defined in NFPA 70, Article 100.
2. Listing and Labeling Agency Qualifications: A "Nationally Recognized Testing Laboratory" as defined in OSHA Regulation 1910.7.
B. Comply with NFPA 70.
PART 2 – PRODUCTS
2.1 MANUFACTURERS
A. Manufacturers: Subject to compliance with requirements, provide products by one of the following:
1. Wires and Cables:
a. American Insulated Wire Corp.; Leviton Manufacturing Co.
b. Carol Cable Co., Inc.
c. Southwire Company.
2. Connectors for Wires and Cables:
a. AMP Incorporated.
b. General Signal; O–Z/Gedney Unit.
c. 3M Company; Electrical Products Division.
2.2 BUILDING WIRES AND CABLES
A. UL–listed building wires and cables with conductor material, insulation type, cable construction, and rating as specified in Part 3 "Wire and Insulation Applications" Article.
B. Cross–Linked Polyethylene Insulation Material: Comply with NEMA WC 7.
C. Conductor Material: Copper.
D. Stranding: Solid conductor for No. 10 AWG and smaller; stranded conductor for larger than No. 10 AWG.
2.3 CONNECTORS AND SPLICES
A. UL–listed, factory–fabricated wiring connectors of size, ampacity rating, material, type, and class for application and service indicated.
PART 3 – EXECUTION
3.1 EXAMINATION
A. Examine raceways and building finishes to receive wires and cables for compliance with requirements for installation tolerances and other conditions affecting performance of wires and cables.
3.2 WIRE AND INSULATION APPLICATIONS
A. Service Entrance: Type THHN/THWN in raceway.
B. Feeders: Type THHN/THWN, in raceway.
C. Branch Circuits: Type THHN/THWN, in raceway.
D. Fire Alarm Circuits: Type THHN/THWN, in raceway.
3.3 INSTALLATION
A. Remove existing wires from raceway before pulling in new wires and cables.
B. Pull Conductors: Use manufacturer–approved pulling compound or lubricant where necessary; compound used must not deteriorate conductor or insulation. Do not exceed manufacturer's recommended maximum pulling tensions and sidewall pressure values.
C. Use pulling means, including fish tape, cable, rope, and basket–weave wire/cable grips, that will not damage cables or raceway.
D. Seal around cables penetrating fire–rated elements according to Division 7 Section "Firestopping."
E. Identify wires and cables according to Division 16 Section "Basic Electrical Materials and Methods."
3.4 CONNECTIONS
A. Conductor Splices: Keep to minimum.
B. Install splices and tapes that possess equivalent or better mechanical strength and insulation ratings than conductors being spliced.
C. Use splice and tap connectors compatible with conductor material.
D. Wiring at Outlets: Install conductor at each outlet, with at least 12 inches (300 mm) of slack.
E. Connect outlets and components to wiring and to ground as indicated and instructed by manufacturer.
3.5 FIELD QUALITY CONTROL
A. Testing: After installation of wires and cables, and before electrical circuitry has been energized, demonstrate product capability and compliance with requirements.
1. Procedures: Perform each visual and mechanical inspection and electrical test stated in NETA ATS, Section 7.3.1. Certify compliance with test parameters.
END OF SECTION

SECTION 16130 - RACEWAYS AND BOXES

PART 1 – GENERAL
1.1 RELATED DOCUMENTS
A. Drawings and general provisions of the Contract, including General and Supplementary Conditions and Division 1 Specification Sections, apply to this Section.
1.2 SUMMARY
A. This Section includes raceways, fittings, boxes, enclosures, and cabinets for electrical wiring.
B. Related Sections include the following:
1. Division 16 Section "Basic Electrical Materials and Methods" for supports, anchors, and identification products.
2. Division 16 Section "Wiring Devices" for devices installed in boxes and for floor–box service fittings.
1.3 DEFINITIONS
A. EMT: Electrical metallic tubing.
B. IMC: Intermediate metal conduit.
C. LFMC: Liquidtight flexible metal conduit.
D. RMC: Rigid Metal Conduit
E. RNC: Rigid Nonmetallic Conduit
1.4 SUBMITTALS
A. Product Data: For surface raceways, wireways and fittings, floor boxes, hinged–cover enclosures, and cabinets.
1.5 COORDINATION
A. Coordinate layout and installation of raceways, boxes, enclosures, cabinets, and suspension system with other construction.
PART 2 – PRODUCTS
2.1 MANUFACTURERS
A. In other Part 2 articles where subparagraph titles below introduce lists, the following requirements apply for product selection:
1. Manufacturers: Subject to compliance with requirements, provide products by the manufacturers specified.
2.2 METAL CONDUIT AND TUBING
A. Acceptable Manufacturers:
1. AFC Cable Systems, Inc.
2. Alflex Inc.
3. Anamet Electrical, Inc.; Anaconda Metal Hose.
B. Rigid Steel Conduit: ANSI C80.1.
C. EMT and Fittings: ANSI C80.3.
1. Fittings: Set–screw or compression type.
D. LFMC: Flexible steel conduit with PVC jacket.
2.3 METAL WIREWAYS
A. Acceptable Manufacturers:
1. Hoffman.
2. Square D.
3. Wiremold
B. Material and Construction: Sheet metal sized and shaped as indicated.
C. Fittings and Accessories: Include couplings, offsets, elbows, expansion joints, adapters, hold–down straps, end caps, and other fittings to match and mate with wireways as required for complete system.
D. Wireway Covers: Screw–cover type.
E. Finish: Manufacturer's standard enamel finish.
2.4 SURFACE RACEWAYS
A. Surface Metal Raceways: Galvanized steel with snap–on covers. Finish with manufacturer's standard prime coating.
1. Acceptable Manufacturers:
a. Thomas & Betts Corporation.
b. Walker Systems, Inc.; Wiremold Company (The).
c. Wiremold Company (The); Electrical Sales Division.
2.5 BOXES, ENCLOSURES, AND CABINETS
A. Acceptable Manufacturers:
1. Spring City Electrical Manufacturing Co.
2. Thomas & Betts Corporation.
3. Walker Systems, Inc.; Wiremold Company (The).
B. Sheet Metal Outlet and Device Boxes: NEMA OS 1.
C. Hinged–Cover Enclosures: NEMA 250, Type 1, with continuous hinge cover and flush latch.
1. Metal Enclosures: Steel, finished inside and out with manufacturer's standard enamel.
2. Nonmetallic Enclosures: Plastic, finished inside with radio–frequency–resistant paint.
D. Nonmetallic Outlet and Device Boxes: NEMA OS 2.
E. Floor Boxes: Sheet metal, fully adjustable, rectangular, sectionalized.
F. Small Sheet Metal Pull and Junction Boxes: NEMA OS 1.
PART 3 – EXECUTION
3.1 RACEWAY APPLICATION
A. Outdoors:
1. Exposed: Rigid steel or IMC
2. Concealed: Rigid steel or IMC
3. Underground, Single Run: RNC.
4. Connection to Vibrating Equipment (Including Transformers and Hydraulic, Pneumatic, Electric Solenoid, or Motor–Driven Equipment): LFMC.
5. Boxes and Enclosures: NEMA 250, Type.
B. Indoors:
1. Exposed (>10' AFF): EMT
2. Exposed (Where subject to damage or < 10'AFF): IMC
3. Concealed: EMT or RNC.
4. Connection to Vibrating Equipment (Including Transformers and Hydraulic, Pneumatic, Electric Solenoid, or Motor–Driven Equipment): LFMC.
5. Damp or Wet Locations: Rigid steel conduit.
6. Boxes and Enclosures: NEMA 250, Type 1, except as follows:
a. Damp or Wet Locations: NEMA 250, Type 3R, metallic.
C. Minimum Raceway Size: 3/4–inch trade size (DN 21).
3.2 INSTALLATION
A. Keep raceways at least 18 inches away from parallel runs of flues and steam or hot–water pipes. Install horizontal raceway runs above water and steam piping.
B. Complete raceway installation before starting conductor installation.
C. Support raceways as specified in Division 16 Section "Basic Electrical Materials and Methods."
D. Install temporary closures to prevent foreign matter from entering raceways.
E. Protect stub–ups from damage where conduits rise through floor slabs. Arrange so curved portions of bends are not visible above the finished slab.
F. Make bends and offsets so ID is not reduced. Keep legs of bends in the same plane and keep straight legs of offsets parallel, unless otherwise indicated.
G. Conceal conduit and EMT within finished walls, ceilings, and floors, unless otherwise indicated.

SECTION 16130 - RACEWAYS AND BOXES (CONTINUED)

H. Raceways Embedded in Slabs: Install in middle 1/3 of slab thickness where practical and leave at least 2 inches (50 mm) of concrete cover.
1. Secure raceways to reinforcing rods to prevent sagging or shifting during concrete placement.
2. Space raceways laterally to prevent voids in concrete.
3. Run conduit larger than 1–inch trade size (DN 27) parallel or at right angles to main reinforcement. Where at right angles to reinforcement, place conduit close to slab support.
4. Change from nonmetallic tubing to Schedule 80 nonmetallic conduit, rigid steel conduit, or IMC before rising above the floor.
I. Install exposed raceways parallel or at right angles to nearby surfaces or structural members and follow surface contours as much as possible.
J. Join raceways with fittings designed and approved for that purpose and make joints tight.
1. Use insulating bushings to protect conductors.
L. Terminations:
1. Where raceways are terminated with locknuts and bushings, align raceways to enter squarely and install locknuts with dished part against box. Use two locknuts, one inside and one outside box.
2. Where raceways are terminated with threaded hubs, screw raceways or fittings tightly into hub so end bears against wire protection shoulder.
M. Install pull wires in empty raceways. Use polypropylene or monofilament plastic line with not less than 400–lb tensile strength. Leave at least 12 inches (300 mm) of slack at each end of pull wire.
N. Telephone and Signal System Raceways, 2–Inch Trade Size (DN 53) and Smaller: In addition to above requirements, install raceways in maximum lengths of 150 feet (45 m) and with a maximum of two 90–degree bends or equivalent. Separate lengths with pull or junction boxes where necessary to comply with these requirements.
O. Install raceway sealing fittings at suitable, approved, and accessible locations and fill them with UL–listed sealing compound. For concealed raceways, install each fitting in a flush steel box with a blank cover plate having a finish similar to that of adjacent plates or surfaces. Install raceway sealing fittings at the following points:
1. Where conduits pass from warm to cold locations, such as boundaries of refrigerated spaces.
2. Where otherwise required by NFPA 70.
P. Stub–up Connections: Extend conduits through concrete floor for connection to freestanding equipment. Install with an adjustable top or coupling threaded inside for plugs set flush with finished floor. Extend conductors to equipment with rigid steel conduit; FMC may be used beginning 6 inches (150 mm) above the floor. Install screwdriver–operated, threaded plugs flush with floor for future equipment connections.
Q. Flexible Connections: Use maximum of 72 inches (1830 mm) of flexible conduit for recessed and semirecessed lighting fixtures; for equipment subject to vibration, noise transmission, or movement; and for all motors. Use LFMC in damp or wet locations. Install separate ground conductor across flexible connections.
3.3 PROTECTION
A. Provide final protection and maintain conditions that ensure coatings, finishes, and cabinets are without damage or deterioration at time of Substantial Completion.
END OF SECTION

SECTION 16140 - WIRING DEVICES

PART 1 – GENERAL
1.1 RELATED DOCUMENTS
A. Drawings and general provisions of the Contract, including General and Supplementary Conditions apply to this Section.
1.2 SUMMARY
A. This Section includes receptacles, connectors, switches (manual and automatic), and finish plates.
1.3 DEFINITIONS
A. GFCI: Ground–fault circuit interrupter.
B. TVSS: Transient voltage surge suppressor.
1.4 SUBMITTALS
A. Product Data: For each product specified.
1.5 QUALITY ASSURANCE
A. Comply with NEMA WD 1.
B. Comply with NFPA 70.
1.6 COORDINATION
A. Receptacles for Owner–Furnished Equipment: Match plug configurations.
1. Cord and Plug Sets: Match equipment requirements.
PART 2 – PRODUCTS
2.1 MANUFACTURERS
A. Manufacturers: Subject to compliance with requirements, provide products by one of the following:
1. Wiring Devices:
a. GE Company; GE Wiring Devices.
b. Leviton Manufacturing Co., Inc.
c. Pass & Seymour/Legrand; Wiring Devices Div.
2. Poke–through, Floor Service Outlets and Telephone/Power Poles:
a. American Electric.
b. Pass & Seymour/Legrand; Wiring Devices Div.
c. Wiremold.
3. Automatic Timeswitches
a. Paragon
b. Tork
4. Lighting Contactor
a. Siemens
b. General Electric
c. Eaton/Cutler Hammer
5. Lighting Controller
a. PCI LiteKeeper
2.2 RECEPTACLES
A. Straight–Blade and Locking Receptacles: Heavy–Duty grade.
B. GFCI Receptacles: Feed–through type, with integral NEMA WD 6, Configuration 5–20R duplex receptacle arranged to protect connected downstream receptacles on same circuit. Design units for installation in a 2–3/4–inch– deep outlet box without an adapter.
C. Isolated–Ground Receptacles: Equipment grounding contacts connected only to the green grounding screw terminal of the device with inherent electrical isolation from mounting strap.
D. TVSS Receptacles: Duplex type, NEMA WD 6, Configuration 5–20R, with integral TVSS in line to ground, line to neutral, and neutral to ground.
1. TVSS Components: Multiple metal–oxide varistors; rated a nominal clamp level of 500 transient–suppression voltage and minimum single transient pulse energy dissipation of 140 J line to neutral, and 70 J line to ground and neutral to ground.
2. Active TVSS Indication: Light visible in face of device to indicate device as "active" or "no longer active."
3. Identification: Distinctive marking on face of device denotes TVSS–type unit.
2.4 MANUAL SWITCHES
A. Snap Switches: Heavy–duty, quiet type.
B. Dimmer Switches: Modular, full–wave, solid–state units with integral, quiet on/off switches and audible and electromagnetic noise filters.
2.5 AUTOMATIC TIMESWITCHES (2–CIRCUIT MAX)
A. Features: 2–Channel, AM/PM Format, 1–minute resolution, LCD Display, 99 set point capability, Daylight Saving/Standard time, Leap Year correction, 30 day integral backup, manual over–ride for each channel, astronomic control of both channels with 1–99 minute offset.
B. Enclosure: Nema 3R, indoor or outdoor.
2.6 LIGHTING CONTACTORS
A. Features: Electrically–held, 20A Contacts, 120V/208V rated, suitable for the type of loads being switched, number of poles as indicated on the plan.
2.7 LIGHTING CONTROLLER (UP TO 8 CIRCUITS):
A. Features: (8) 20A 120V Relay outputs, 8 switch inputs, master override, LCD display, internal Astronomic timeclock, Daylight Savings/Standard Times, Self–prompting keypad programming, 512 programs for 7 day programming, 32 holidays, Warn Off feature.
B. Enclosure: Nema 1 indoor, Nema 3R outdoor.
2.8 WALL PLATES
A. Single and combination types match corresponding wiring devices.
1. Plate–Securing Screws: Metal with head color to match plate finish.
2. Material for Unfinished Spaces: Smooth plastic.
2.9 FLOOR SERVICE FITTINGS
A. Type: Type: Modular, pop–up, dual–service units suitable for wiring method used.
B. Compartmentation: Barrier separates power and signal compartments.
C. Housing Material: Steel.
2.10 POKE–THROUGH ASSEMBLIES
A. Description: Factory–fabricated and –wired assembly of below–floor junction box unit with multichanneled, through–floor raceway/firestop unit and detachable matching floor service–outlet assembly.
2.11 MULTIOUTLET ASSEMBLIES
A. Components of Assemblies: Products from a single manufacturer designed for use as a complete, matching assembly of raceways and receptacles.
B. Raceway Material: Metal, with manufacturer's standard finish.
C. Raceway Material: Nonmetal.
D. Wire: No. 12 AWG.
2.12 VOICE–DATA/POWER SERVICE POLES
A. Description: Factory–assembled and –wired units to extend power, telephone, and data service from distribution wiring concealed in ceiling to devices or outlets in pole near floor.
1. Poles: Nominal 2.5–inch– square cross section with height adequate to extend from floor to at least 6 inches above ceiling, and separate channels for power and signal wiring.
2. Mounting: Ceiling trim flange with concealed bracing arranged for positive connection to ceiling supports, and pole foot with carpet pad attachment.
3. Finishes: One of manufacturers standard finish and trim combinations, including painted and satin anodized–aluminum finishes and wood–grain–type trim.
2.13 FINISHES
A. Color: White, unless otherwise indicated or required by Code.
PART 3 – EXECUTION
3.1 INSTALLATION
A. Install devices and assemblies plumb and secure.
B. Install wall plates when painting is complete.
C. Install wall dimmers to achieve indicated rating after derating for ganging as instructed by manufacturer.
D. Do not share neutral conductor on load side of dimmers.
E. Arrangement of Devices: Unless otherwise indicated, mount flush, with long dimension vertical, and grounding terminal of receptacles on bottom. Group adjacent switches under single, multigang wall plates.
F. Protect devices and assemblies during painting.
G. Adjust locations at which floor service outlets and telephone/power service poles are installed to suit arrangement of partitions and furnishings.
H. Mounting Heights: Heights above finished floor of devices shall be as indicated below, measured to the center of the device faceplate. If heights noted on the drawings differ from these, the drawings shall take precedence.
1. Outlets (power/communications/data): 18 inches.
2. Switches: 42 inches.
3. Wall phone: 42 inches.
3.2 IDENTIFICATION
A. Comply with Division 16 Section "Basic Electrical Materials and Methods."
1. Switches: Where three or more switches are ganged, and elsewhere as indicated, identify each switch with approved legend engraved on wall plate.
2. Receptacles: Identify panelboard and circuit number from which served. Use machine–

SECTION 16140 - WIRING DEVICES (CONTINUED)

printed, pressure–sensitive, abrasion–resistant label tape on face of plate and durable wire markers or tags within outlet boxes.
3.3 CONNECTIONS
A. Connect wiring device grounding terminal to outlet box with bonding jumper.
B. Connect wiring device grounding terminal to branch–circuit equipment grounding conductor.
C. Isolated–Ground Receptacles: Connect to isolated–ground conductor routed to designated isolated equipment ground terminal of electrical system.
D. Tighten electrical connectors and terminals according to manufacturers published torque–tightening values. If manufacturers torque values are not indicated, use those specified in UL 486A and UL 486B.
3.4 FIELD QUALITY CONTROL
A. Test wiring devices for proper polarity and ground continuity. Operate each device at least six times.
END OF SECTION 16140

SECTION 16442 - PANELBOARDS

PART 1 – GENERAL
1.1 RELATED DOCUMENTS
A. Drawings and general provisions of the Contract, including General and Supplementary Conditions apply to this Section.
1.2 SUMMARY
A. This Section includes panelboards, overcurrent protective devices, and associated auxiliary equipment rated 600 V and less for the following types:
1. Lighting and appliance branch–circuit panelboards.
2. Distribution panelboards.
3. Transient voltage surge suppressor panelboards.
1.3 DEFINITIONS
A. EMI: Electromagnetic interference.
B. GFCI: Ground–fault circuit interrupter.
C. RFI: Radio–frequency interference.
D. RMS: Root mean square.
E. SPDT: Single pole, double throw.
F. TVSS: Transient voltage surge suppressor.
1.4 SUBMITTALS
A. Product Data: For each type of panelboard, overcurrent protective device, TVSS device, accessory, and component indicated. Include dimensions and manufacturers' technical data on features, performance, electrical characteristics, ratings, and finishes.
B. Shop Drawings: For each panelboard and related equipment.
1. Dimensioned plans, elevations, sections, and details. Show tabulations of installed devices, equipment features, and ratings. Include the following:
a. Enclosure types and details for types other than NEMA 250, Type 1.
b. Bus configuration, current, and voltage ratings.
c. Short–circuit current rating of panelboards and overcurrent protective devices.
C. Panelboard Schedules: For installation in panelboards. Submit final versions after load balancing. Schedules shall be in the same format as the schedules on the construction documents.
1.5 QUALITY ASSURANCE
A. Comply with NEMA PB 1.
B. Comply with NFPA 70.
1.6 COORDINATION
A. Coordinate layout and installation of panelboards and components with other construction that penetrates walls or is supported by them, including electrical and other types of equipment, raceways, piping, and encumbrances to workspace clearance requirements.
1.7 EXTRA MATERIALS
A. Keys: Two spares of each type of panelboard cabinet lock.
PART 2 – PRODUCTS
2.1 MANUFACTURERS
A. Manufacturers: Subject to compliance with requirements, provide products by one of the following:
1. Panelboards, Overcurrent Protective Devices, Controllers, Contactors, and Accessories:
a. Eaton Corp.; Cutler–Hammer Products.
b. General Electric Co.; Electrical Distribution & Control Div.
c. Siemens Energy & Automation, Inc.
2. TVSS Panelboards:
a. Current Technology, Inc.
b. Liebert Corporation.
c. Cutler Hammer.
2.2 FABRICATION AND FEATURES
A. Enclosures: Mounting as indicated on the plans. NEMA PB 1, Type 1, to meet environmental conditions at installed location.
1. Outdoor Locations: NEMA 250, Type 3R.
2. Kitchen Areas: NEMA 250, Type 4X, stainless steel.
3. Other Wet or Damp Indoor Locations: NEMA 250, Type 4.
B. Hinged Front Cover: Entire front trim hinged to box and with standard door within hinged trim cover (door–in–door type).
C. Finish: Manufacturer's standard enamel finish over corrosion–resistant treatment or primer coat.
D. Directory Card: With transparent protective cover, mounted inside metal frame, inside panelboard door. Must be filled in correctly and legibly.
E. Bus: Copper. Provide bussing the full height of the panel to allow installation of the maximum possible future devices, even if not explicitly called out as spaces.
F. Main and Neutral Lugs: Mechanical type suitable for use with conductor material.
G. Equipment Ground Bus: Adequate for feeder and branch–circuit equipment ground conductors; bonded to box.
H. Future Devices: Mounting brackets, bus connections, and necessary appurtenances required for future installation of devices.
I. Isolated Equipment Ground Bus: Where noted on the drawings, provide an isolated ground bus adequate for branch–circuit equipment ground conductors; insulated from box. Where any device is shown to require an isolated ground, provide the panel(s) and switchboard(s) from the device to the upstream transformer or Service with isolated ground buses matching the size of the normal ground bus.
J. Feed–through Lugs: Mechanical type suitable for use with conductor material. Locate at opposite end of bus from incoming lugs or main device.
2.3 PANELBOARD SHORT–CIRCUIT RATING
A. Where required by the drawings, provide a panel labeled to indicate series–connected rating with integral or remote upstream devices. Include size and type of upstream device allowable, branch devices allowable, and UL series–connected short–circuit rating.
B. For panelboards not specifically noted on the drawings to be Series–Rated, provide panelboards fully rated to interrupt symmetrical short–circuit current available at it's terminals
2.4 LIGHTING AND APPLIANCE BRANCH–CIRCUIT PANELBOARDS
A. Branch Overcurrent Protective Devices: Plug–in circuit breakers, replaceable without disturbing adjacent units.
B. Doors: Front mounted with concealed hinges; secured with flush latch with tumbler lock; keyed alike (door–in–door type).
2.5 DISTRIBUTION PANELBOARDS
A. Doors: Front mounted, except omit in fused–switch panelboards; secured with vault–type latch with tumbler lock; keyed alike (door–in–door type).
B. Main Overcurrent Protective Devices: Circuit breaker.
C. Branch overcurrent protective devices shall be one of the following:
1. For Circuit–Breaker Frame Sizes 125 A and Smaller: Plug–in circuit breakers.
2. For Circuit–Breaker Frame Sizes Larger Than 125 A: Bolt–on circuit breakers; plug–in circuit breakers where individual positive–locking device requires mechanical release for removal.
2.6 TVSS PANELBOARDS
A. Doors: Front mounted; secured with vault–type latch with tumbler lock; keyed alike (door–in–door type). Manufacturer's standard enamel finish over corrosion–resistant treatment or primer coat.
B. Main Overcurrent Devices: Thermal–magnetic circuit breaker.
C. Branch Overcurrent Protective Devices: Bolt–on circuit breakers.
D. Bus: Copper phase and neutral buses; 200 percent capacity neutral bus.
2.7 OVERCURRENT PROTECTIVE DEVICES
A. Molded–Case Circuit Breaker: NEMA AB 1, with interrupting capacity to meet available fault currents. Must be SWD rated when used for switching light circuits.
1. Thermal–Magnetic Circuit Breakers: Inverse time–current element for low–level overloads, and instantaneous magnetic trip element for short circuits. Adjustable magnetic trip setting for circuit–breaker frame sizes 250 A and larger.
2. GFCI Circuit Breakers: Single– and two–pole configurations with 5–mA trip sensitivity.
B. Molded–Case Circuit–Breaker Features and Accessories. Standard frame sizes, trip ratings, and number of poles.
1. Lugs: Mechanical style, suitable for number, size, trip ratings, and material of conductors.
2. Application Listing: Appropriate for application; Type SWD for switching fluorescent lighting loads; Type HACR for heating, air–conditioning, and refrigerating equipment.
3. Ground–Fault Protection: Integrally mounted relay and trip unit with adjustable pickup and time–delay settings, push–to–test feature, and ground–fault indicator.
C. Fused Switch: NEMA KS 1, Type HD; clips to accommodate specified fuses; lockable handle.
D. Arc–Fault protection shall be provided for all bedroom receptacle outlets (AFCI) per NEC.
PART 3 – EXECUTION
3.1 INSTALLATION
A. Install panelboards and accessories according to NEMA PB 1.1.
B. Mounting Heights: Top of trim 74 inches (1880 mm) above finished floor, unless otherwise indicated.
C. Mounting: Plumb and rigid without distortion of box. Mount recessed panelboards with fronts uniformly flush with wall finish.
D. Circuit Directory: Create a directory to indicate installed circuit loads after balancing panelboard loads. Obtain approval before installing. Use a computer or typewriter to create directory; handwritten directories are not acceptable.
E. Install filler plates in unused spaces.
F. Provision for Future Circuits at Flush Panelboards: Stub four 1–inch (27–GRC) empty conduits from panelboard into accessible ceiling space or space designated to be accessible ceiling space in the future. Stub four 1–inch (27–GRC) empty conduits into raised floor space or below slab not on grade.
G. Wiring in Panelboard Gutters: Arrange conductors into groups and bundle and wrap with wire ties after completing load balancing.
3.2 IDENTIFICATION
A. Identify field–installed conductors, interconnecting wiring, and components; provide warning signs as specified in Division 16 Section "Basic Electrical Materials and Methods."
B. Panelboard Nameplates: Label each panelboard with engraved metal or laminated–plastic nameplate mounted with corrosion–resistant screws.
3.3 CONNECTIONS
A. Install equipment grounding connections for panelboards with ground continuity to main electrical ground bus.
B. Tighten electrical connectors and terminals according to manufacturer's published torque–tightening values. If manufacturer's torque values are not indicated, use those specified in UL 486A and UL 486B.
3.4 FIELD QUALITY CONTROL
A. Prepare for acceptance tests as follows:
1. Test insulation resistance for each panelboard bus, component, connecting supply, feeder, and control circuit.
2. Test continuity of each circuit.
3.5 ADJUSTING
A. Set field–adjustable switches and circuit–breaker trip ranges.
3.6 CLEANING
A. On completion of installation, inspect interior and exterior of panelboards. Remove paint splatters and other spots. Vacuum dirt and debris; do not use compressed air to assist in cleaning. Repair exposed surfaces to match original finish.
END OF SECTION

SECTION 16491 - FUSES

PART 1 – GENERAL
1.1 RELATED DOCUMENTS
A. Drawings and general provisions of the Contract, including General and Supplementary Conditions and Division 1 Specification Sections, apply to this Section.
1.2 SUMMARY
A. This Section includes cartridge fuses, rated 600 V and less, for use in switches, panelboards, switchboards, controllers, and motor–control centers; and spare fuse cabinets.
1.3 SUBMITTALS
A. Maintenance Data: For tripping devices to include in maintenance manuals specified in Division 1.
1.4 QUALITY ASSURANCE
A. Source Limitations: Provide fuses from a single manufacturer.
B. Comply with NEMA FU 1.
C. Comply with NFPA 70.
1.5 PROJECT CONDITIONS
A. Where ambient temperature to which fuses are directly exposed is less than 40 deg F (4.4 deg C) or more than 100 deg F (38 deg C), apply manufacturer's ambient temperature adjustment factors to fuse ratings.
1.6 COORDINATION
A. Coordinate fuse ratings with HVAC and refrigeration equipment nameplate limitations of maximum fuse size.
1.7 EXTRA MATERIALS
A. Furnish extra materials described below that match products installed and that are packaged in original cartons or containers and identified with labels describing contents.
1. Fuses: Quantity equal to 10 percent of each fuse type and size, but not fewer than six of each type and size.
PART 2 – PRODUCTS
2.1 MANUFACTURERS
A. Manufacturers: Subject to compliance with requirements, provide products by one of the following:
1. Cooper Industries, Inc.; Bussmann Div.
2. General Electric Co.; Wiring Devices Div.
3. Tracor, Inc.; Littelfuse, Inc. Subsidiary.
PART 3 – EXECUTION
3.1 EXAMINATION
A. Examine utilization equipment nameplates and installation instructions. Install fuses of sizes and with characteristics appropriate for each piece of equipment.
B. Evaluate ambient temperatures to determine if fuse rating adjustment factors must be applied to fuse ratings.
C. Proceed with installation only after unsatisfactory conditions have been corrected.
3.2 FUSE APPLICATIONS
A. Motor Branch Circuits: Class RK1, time delay.
3.3 INSTALLATION
A. Install fuses in fusible devices. Arrange fuses so rating information is readable without removing fuse.
3.4 IDENTIFICATION
A. Install labels indicating fuse replacement information on inside door of each fused switch.
END OF SECTION

SECTION 16511 - INTERIOR LIGHTING

PART 1 – GENERAL
1.1 RELATED DOCUMENTS
A. Drawings and general provisions of the Contract, including General and Supplementary Conditions and Division 1 Specification Sections, apply to this Section.
1.2 SUMMARY
A. This Section includes interior lighting fixtures, lighting fixtures mounted on exterior building surfaces, lamps, ballasts, emergency lighting units, and accessories.
1.3 SUBMITTALS
A. Product Data: For each type of lighting fixture indicated, arranged in order of fixture designation. Include manufacturers published information.
1.6 EXTRA MATERIALS
A. Furnish extra materials described below that match products installed and that are packaged with protective covering for storage and identified with labels describing contents.
1. Lamps: 10 for every 100 of each type and rating installed. Furnish at least five of each type.
2. Plastic Diffusers and Lenses: 1 for every 100 of each type and rating installed. Furnish at least two of each type.
PART 2 – PRODUCTS
2.1 MANUFACTURERS
A. Available Products: Subject to compliance with requirements, products that may be incorporated into the Work include, but are not limited to, the products indicated in the Interior Lighting Fixture Schedule on the drawings.
2.2 FIXTURES AND FIXTURE COMPONENTS, GENERAL
A. Sheet Metal Components: Steel, unless otherwise indicated. Form and support to prevent warping and sagging.
B. Doors, Frames, and Other Internal Access: Smooth operating, free from light leakage under operating conditions, and arranged to permit relamping without use of tools.
C. Reflecting Surfaces: Minimum reflectance as follows, unless otherwise indicated:
1. White Surfaces: 85 percent.
2. Specular Surfaces: 83 percent.
3. Diffusing Specular Surfaces: 75 percent.
4. Laminated Silver Metallized Film: 90 percent.
D. Lenses, Diffusers, Covers, and Globes: 100 percent virgin acrylic plastic or annealed crystal glass, unless otherwise indicated.
E. Electromagnetic Interference Filters: Integral to fixture assembly. Provide one filter for each ballast. Suppress conducted electromagnetic interference filters as required by MIL–STD–461.
2.3 FLUORESCENT LAMP BALLASTS
A. General Requirements: Unless otherwise indicated, features include the following:
1. Designed for type and quantity of lamps indicated at full light output.
2. Total Harmonic Distortion Rating: Less than 20 percent.
3. Sound Rating: A.
B. Ballasts for Compact Lamps: Unless otherwise indicated, additional features include the following:
1. Type: Electronic or electromagnetic, fully encapsulated in potting compound.
2. Power Factor: 90 percent, minimum.
3. Operating Frequency: 20 kHz or higher.
4. Flicker: Less than 5 percent.
5. Lamp Current Crest Factor: Less than 1.7.
6. Transient Protection: Comply with IEEE C62.41 for Category A1 locations.

SECTION 16511 - INTERIOR LIGHTING (CONTINUED)

C. Ballasts for Dimmer–Controlled Fixtures: Comply with general and fixture–related requirements above for electronic ballasts.
1. Compatibility: Certified by manufacturer for use with specific dimming system indicated for use with each dimming ballast.
2.4 HIGH INTENSITY DISCHARGE (HID) FIXTURE BALLASTS
A. Type:
1. 320W, 350W, and 400W Metal Halide Lamps: Electronic multivolt with an efficiency of at least 93% at full lamp output. Starting current shall be less than operating current. Where indicated on the drawings, ballasts shall be dimmable to 50% using standard 0 – 10 Volt DC controls.
2. High Pressure Sodium and Metal Halide Lamps (except as listed in #1 above): Constant wattage autotransformer or regulating high–power–factor type, unless indicated otherwise.
2.5 EXIT SIGNS
A. General Requirements: Comply with UL 924 and the following:
1. Sign Colors: Letters shall be Green.
B. Self–Powered Exit Signs (Battery Type): Integral automatic charger in a self–contained power pack.
1. Battery: Sealed, maintenance–free, nickel–cadmium type with special warranty.
2. Charger: Fully automatic, solid–state type with sealed transfer relay.
2.6 EMERGENCY LIGHTING UNITS
A. General Requirements: Self–contained units. Comply with UL 924. Units include the following features:
1. Battery: Sealed, maintenance–free, lead–acid type with minimum 10–year nominal life and special warranty.
2. Charger: Fully automatic, solid–state type with sealed transfer relay.
3. Operation: Relay automatically turns lamp on when supply circuit voltage drops to 80 percent of nominal voltage or below. Lamp automatically disconnects from battery when voltage approaches deep–discharge level. When normal voltage is restored, relay disconnects lamps, and battery is automatically recharged and floated on charger.
2.7 EMERGENCY FLUORESCENT POWER SUPPLY UNIT
A. Internal Type: Self–contained, modular, battery–inverter unit factory mounted within fixture body, rated 1300 lumens (minimum). Comply with UL 924.
1. Test Switch and Light–Emitting Diode Indicator Light: Visible and accessible without opening fixture or entering ceiling space.
2. Battery: Sealed, maintenance–free, nickel–cadmium type with minimum 10–year nominal life.
3. Charger: Fully automatic, solid–state, constant–current type.
2.8 LAMPS
A. Fluorescent: 3500 Kelvin color temperature, fixture manufacturer's standard type, per drawings.
B. High Pressure Sodium: Fixture manufacturer's standard type, per drawings.
C. Metal Halide: Pulse start type with warranteed performance with the fixture ballast, per drawings.
2.9 FIXTURE SUPPORT COMPONENTS
A. Comply with Division 16 Section "Basic Electrical Materials and Methods," for channel– and angle–iron supports and nonmetallic channel and angle supports.
B. Provide manufacturer's standard mounting hardware, finish same as fixture. canopy. Finish same as fixture.
PART 3 – EXECUTION
3.1 INSTALLATION
A. Fixtures: Set level, plumb, and square with ceiling and walls, and secure according to manufacturer's written instructions and approved submittal materials. Install lamps in each fixture.
END OF SECTION

FRANCHISEE: ______________________ ______________
SIGNATURE DATE
AD: ______________________ ______________
SIGNATURE DATE

bar napkin productions
2828 n central avenue
suite 1300
phoenix, az 85004
602 . 492 . 9494
www.bnp-llc.com

GREAT
STEAK
SURF CITY
SQUEEZE
STORE 7621 1946

PROJECT LOCATION
11800 WEST BROAD ST.
SUITE 2116
RICHMOND, VA 23233

ISSUE DATE

CITY SUBMITTAL	07.29.16

BN1309
E5 SPECIFICATIONS

Design Management Solutions LLC

THESE DRAWINGS AND ASSOCIATED DOCUMENTATION CONTAIN INFORMATION, DESIGNS, CONCEPTS, AND DATA THAT ARE THE SOLE PROPERTY OF DESIGN MANAGEMENT SOLUTIONS LLC. THIS INFORMATION MAY NOT BE USED FOR ANY PURPOSE OTHER THAN ORIGINALLY INTENDED WITHOUT THE EXPRESSED WRITTEN CONSENT AND PERMISSION OF THE ENGINEER AND DESIGN MANAGEMENT SOLUTIONS LLC.

DMS#E0525
016–164
DFT: RSM
DSN: RSM
CHK: GL

© THIS DRAWING IS AN INSTRUMENT OF SERVICE AND THE PROPERTY OF BAR NAPKIN,LLC. THIS DRAWING MAY NOT BE REPRODUCED OR UTILIZED IN ANY MANNER WITHOUT THEIR WRITTEN PERMISSION.
8/30/2016 12:49:38 PM - C:\Backup\Dropbox\DMS Dropbox Projects\016-164 Surf City Squeeze GREAT STEAK Virginia\DMS CDs\E0525_Surf City Squeeze Virginia_TI.dwg - Sam